PROCEDURES FOR CHEMICAL ANALYSIS

Coweeta Hydrologic Laboratory
3160 Coweeta Lab Road
Otto, NC 28763

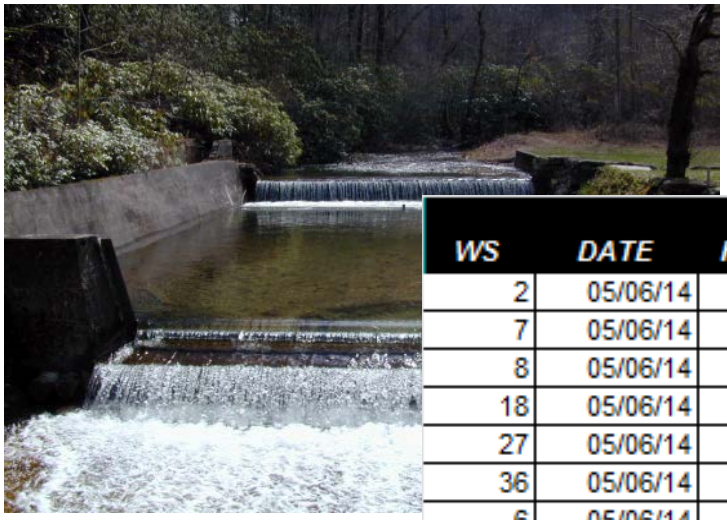

WS	DATE	HEAD	pH	NH4-N	SiO3	CL	NO3-N
2	05/06/14	0.298	6.82	0.006	10.103	0.778	0.007
7	05/06/14	0.585	6.83	0.006	8.267	0.565	0.082
8	05/06/14		6.7	0.006	7.401	0.470	0.020
18	05/06/14	0.232	6.76	0.007	8.490	0.617	0.009
27	05/06/14	0.398	5.88	0.007	3.878	0.524	0.071
36	05/06/14	0.487	6.69	0.005	6.294	0.492	0.027
6	05/06/14	0.226	6.76	0.005	7.763	0.612	0.379
17	05/06/14	0.229	6.79	0.003	8.207	0.827	0.163
1	05/06/14	0.267	6.79	0.006	9.713	0.963	0.055
13	05/06/14	0.253	6.45	0.005	6.367	0.480	0.006

Laboratory Manager: Cindi Brown

Laboratory Technicians: Carol Harper
Sheila Gregory
YètŜ /2tŜY·I·y˙

Project Leader: Chelcy F. Miniat

U.S. Forest Service **University of Georgia**

FOREWORD

This manual represents the combined efforts of many persons, past and present. The Coweeta chemistry laboratory has evolved since the early 1970's into a first class analytical facility designed to support a wide range of ecological research. I think it is important to mention some people who have contributed to the methods development and long term data sets.

Scientist:	Lab Technicians:
Wayne Swank	Mike McSwain
James Douglass	Richie Beale
Lloyd Swift	Mary McCall
Dan Neary	Kitti Reynolds
Jack Waide	Lee Reynolds
Jennifer Knoepp	Patsy Clinton
James Vose	Jim Deal
Katherine Elliott	Cindi Brown
Steve McNulty	Carol Harper
Barton Clinton	Wilba Curtis
Brian Kloeppel	Neal Muldoon
Chelcy Ford Miniat	Sheila Gregory
Peter Caldwell	Bob McCollum
Andrew Oishi	Mamie Poindexter
	Brandon Welch
	Kyle Coleman

This manual does not include the Coweeta Chemical Hygiene and Safety Plan. The Safety manual for Coweeta can be found on the Coweeta website at https://www.srs.fs.usda.gov/coweeta/tools-and-data/. Prior to working in the chemistry lab all personnel will receive safety training and will get approval from the lab manager before starting any procedure.

Cindi Brown, Laboratory Manager
Coweeta Hydrologic Laboratory
April 25, 2017

INTRODUCTION

Coweeta Hydrologic Laboratory was established in 1934 to study watershed ecosystem responses to natural, management, and other human disturbances of southeastern forest. Samples from the Coweeta 5,400 acre experimental forest consist of weekly streamflow grab samples, bulk and dryfall precipitation, soil solutions, soil and plant samples, and throughfall. Analyses are performed primarily with seven analytical instruments: an Astoria 2 autoanalyzer, a Perkin-Elmer AAnalyst 300 atomic absorption spectrophotometer (cations), a Thermo Scientific iCAP6300 inductively couple plasma spectrometer, a Dionex ICS 4000 ion chromatograph (anions), a Flash EA 1112 series NC Soil Analyzer, an Orion pH meter, and a Shimadzu TOC-Vcph/TNM-1 DOC/TN analyzer. The following sections discuss laboratory techniques used to process field samples and to determine mineral and nutrient concentrations. Details of field methods will be omitted, except when necessary to identify samples or to clarify a laboratory process. For field collection protocols see 'Field Technician Manual' (http://coweeta.uga.edu/cwt_kb/1/) or study plan.

ACKNOWLEDGEMENTS

This manual is a revision of previous Analytical Laboratory procedure manuals. Previous authors include: Mike McSwain / Richie Beale, Richie Beale / Barbara Reynolds, and Barbara Reynolds/James M. Deal and James M. Deal. Sponsoring agencies are the U.S. Forest Service and University of Georgia at Athens.

A special thank you to Dr. Jennifer Knoepp for her many contributions towards the compilation of several procedures found in this document and her assistance in editing portions of the document.

CONTENTS

Page

Foreword 2

Introduction 3

Acknowledgements 4

Sample Collection 9

Quality Assurance 10

Laboratory Protocol

I. Laboratory Water 11

II. Washing of Glassware Vials and Bottles 11

III. Acid Washing of Soil Lysimeters 12

IV. Preparation of PMA Preservative 13

V. Preparation of Soils for Chemical Analysis 13

VI. Sediments Protocol 13

VII. Preparation of Plant Tissue for Chemical Analysis 13

Procedures for Analysis of Water

I. Procedure for Determining pH 14

II. Procedure for Filtering Samples for DOC 14

III. Compositing Water Samples 14

IV. Total Acidity in Water Sample 15

V. Total Alkalinity in Water Sample 15

VI. Determination of Bicarbonate as CaCO3 16

VII. Method for Nitrogen Analysis of Dry Deposition (calculation for TKN) 16

VIII. Turbidity 17

A. TSS 17

B. Total Carbon and Total Nitrogen on Filter 17

C. Volatile Solids 18

IX. Recovery of Adsorbed Ions from Ion Exchange Resins 18

Procedures for Analysis of Soil

I. Preparation of Soils for Chemical Analysis 20

II. Exchangeable Soil Cations
A. NH4Cl extraction for cation concentration and Effective Cation Exchange Capacity 20

B. Double Acid extraction for Exchangeable Soil Cations Extraction (Method) 21

C. NH_4Ac extraction for cation concentrations and Cation Exchange Capacity 22

III NH_4 - NO_3 Extraction (Soil and Forest Floor) 22

IV. Mehlich I PO_4 extraction 23

V. Nitrification: 30-Day Soil Laboratory Incubation 23

VI. Resin Membrane Anion and Cation Sheets 24

VII. Phosphate Extractable Sulfate 26

VIII. Langmuir Sulfate Adsorption 26

IX. Soil Bulk Density 27

X. Soil pH (H_2O and 0.01 M $CaCl_2$) 27

XI. Exchangeable Acidity in Soils (Adams Buffer method) 28

XII. Exchangeable Acidity in Soils (modified Mehlich) 28

XIII. Total C and N 30

XIV. Total Organic Phosphorous – Ignition Method 30

XV. Intentionally Left Blank 32

Procedures for Analysis of Sediment

I. Sediments Protocol 33

A. Collection 33

B. Separation of Organic Material 33

C. Mechanical Analysis 33

D. Calculations 34

II. Total Cations in Sediments 34

Procedures for Analysis of Plant Tissue

I. Preparation of Plant Tissue for Chemical Analysis 36

II. Digestion for Total Cations in Plant Tissue 36

III. Ash Free Weight 37

IV. Total C and N 37

V. Determination of Total Non-Structural Carbohydrates..... 37

References 41

Instrumental Methods 42

Combustion Analysis of Total Carbon, and Nitrogen in Soil and Plant Tissue Samples 43

Micro-membrane Suppressed Ion Chromatography for Chloride, Nitrate, Orthophosphate, Bromide, and Sulfate 53

Automated Wet Chemistry for Ammonium 64

Automated Wet Chemistry by Cadmium Reduction for Nitrate 75

Automated Wet Chemistry for Orthophosphate 86

Automated Wet Chemistry for Silicate 97

Electrometric Determination of pH and Titration for Bicarbonate 108

Inductively Coupled Spectroscopy
Potassium, Sodium, Calcium, Magnesium, Phosphorous and Aluminum 116

Combustion Analysis of Water Samples for Dissolved Organic Carbon and Total Dissolved Nitrogen 122

Appendix I - Methods Archive

I. Digestion of Total Cations in Water Samples 129

II. Total Phosphorus in Soil and Sediment Samples 129

III. Centrifuging Whole and Filtrate Samples for TKN Analysis 130

IV. Kjeldahl digestion for Water Samples 130

V. Compositing Lysimeters and Well Samples 131

VI. Compositing Restoration Overland Flow Samples 131

VII. Speciation of Stream and Soil Solution Aluminum 132

VIII. Procedure for washing IC vials and caps 133

Appendix II – Instrumentation Methods Archive
Methane and Carbon Dioxide Gas Analysis by Gas Chromatography 134

Nitrous Oxide Gas Analysis by Gas Chromatography 143

Aluminum by Graphite Furnace Atomic Absorption Spectroscopy 149

Total Kjeldahl Nitrogen by Automated Wet Chemistry 157

Automated Wet Chemistry for Ammonium 168

Automated Wet Chemistry by Cadmium Reduction for Nitrate 180

Automated Wet Chemistry for Orthophosphate 193

Automated Wet Chemistry for Silicate 206

Flow Injection Analysis for Total Phosphorous and ortho-Phosphate Analysis 217

Inductively Coupled Spectroscopy – Ultima II ICP
Potassium, Sodium, Calcium, Magnesium, Phosphorous and Aluminum 227

Micro-membrane Suppressed Ion Chromatography for Chloride, Nitrate, Orthophosphate, Bromide, and Sulfate 234

Atomic Absorption Spectrophotometer Potassium, Sodium, Calcium, and Magnesium 248

Appendix III - Instrument History with Average Method Detection Limit 258

Appendix IV – Safety Guidelines for the Lab 260

Section 1 – Use of Acids..... 260
Section 2 – Use of Bases..... 261
Section 3 – Use of Oxidizers..... 261
Section 4 – Use of Reactives..... 263
Section 5 – Incompatible Chemicals..... 264
Section 6 – Use of Muffle Furnace..... 266
Section 7 – Use of Centrifuge..... 266
Section 8 – Use of Ovens..... 267
Section 9 – Use of Ball Mill Grinder..... 268

Appendix V – Miscellaneous 269

Filling Resin Column..... 270

SAMPLE COLLECTION

Samples collected for analysis at Coweeta include a wide variety of water, soil, and plant tissue. Sample collection protocols are specified in the experimental study plan. All samples must be clearly labeled with study name, identifying sample number, and date of collection. All samples entering the lab should be added to the analytical sample log file, with all sample label information as well as sample type, processing and analyses required.

Water samples are normally collected in clean 50ml vials or 250 ml polypropylene bottles. Samples are labeled and refrigerated at 4°C for immediate analysis or frozen at a temperature of -18 ^{o}C for subsequent analysis. Water samples for DOC analysis are collected in 40ml muffled glass vials. Precipitation samples are collected in 2 liter polypropylene bottles that have been treated with 1ml of a 1000 mg/l phenol mercuric acetate solution. This preservative has proven to be effective in retarding biological activity which could change the concentration of certain nutrients. Wetfall/Dryfall samplers use a 14 liter polyethylene bucket. The samples collected in buckets are emptied into clean labeled 500ml polypropylene bottles and refrigerated prior to analysis or frozen for subsequent analysis. Soil solutions collected using tension Lysimeters are composited monthly by freezing a subsample on collection day; composites remain frozen until ready to analyze.

Soil samples are generally collected in plastic ziplock bags. Bags are labeled and placed into a cooler with blue ice prior to return to lab. Gloves should be worn when collecting soils from hazardous sites. Soil samples may be extracted in the field, in the lab, or following air or oven drying, as directed by the study plan.

Plant tissue samples vary greatly as to the method of collection and include fresh green leaves and stems, litter fall, and forest floor. All plant tissue is oven dried at no more than 65 degrees C. Samples are then ground to <2mm and stored in 20ml glass scintillations vials.

QUALITY ASSURANCE/QUALITY CONTROL

For the full Coweeta Analytical Lab Quality Assurance/Quality Control Protocol go to the Coweeta website http://www.srs.fs.usda.gov/coweeta/areas/long-term-research/files/QA-QCprotocol.pdf

Washing Protocol - See Section II under Laboratory Protocol for a full description of the washing protocol for glassware and bottles.

1. The conductivity of 5% of all sample bottles and sample vials washed is tested to ensure clean sample containers. If any bottles are found to have conductivity greater than 1.0 micromhos/cm then that set will be rinsed again and checked before being used.

Blanks - Deionized water blanks are analyzed weekly for all analytes. These blanks serve as a check on the DI water system. All extractions and digestions require a minimum of 3 blanks be included. Samples frozen require 3 DI blanks be included.

Calibration and Standards

1. Certified stock solutions used to make calibrants and certified reference standards are purchased yearly.
2. Calibration of the Flash CN Analyzer is done with Aspartic Acid. Acceptable range is given by the manufacturer as: Carbon (35.79-36.39), and Nitrogen (10.22%-10.82%). After calibration, a certified reference soil or certified plant tissue standard is analyzed to verify the calibration. The reference is run after every ten samples to check the stability of the instrument.
3. A standard curve is determined before every analysis with the Ion Chromatograph, colorimetric analyzer, spectrometers, and the DOC/TN analyzer. An R squared value must equal 0.99 or greater before samples are analyzed. Certified QC solutions are analyzed after the calibration of the instrument to verify the calibration curve. Check calibrants and/or certified standards are analyzed after every tenth sample to check the stability of the instrument.

Quality Control

1. QC concentrates from NSI and ERA are sent to the lab quarterly. They are analyzed for SO_4, Br, Cl, NO_3-N, NH_4-N, PO_4, K, Na, Ca, Mg, DOC, TN, Al, P and TP. A value within the manufactures range is considered acceptable. Samples are run in triplicate. The percent error versus the true value are plotted yearly for each analyte to show trends.
2. NIST Peach Leaves or Apple Leaves are digested and analyzed in triplicate with each set of plant samples analyzed on the ICP. Any dilutions needed for soil or plant analysis are done in duplicate.
3. NADP samples analyzed here for NO_3, NH_4 and PO_4 are also analyzed by the USGS Central Analytical Lab.
4. Method limits of detection are determined quarterly for all analytes for all instruments for every sample matrix analyzed at Coweeta.
5. All balances are checked for calibration each year by a certified technician.
6. The calibration of oven temperatures are checked yearly and posted on the oven.
7. Long term chemistry data is verified by comparison of past data to current. Values that fall out of range are analyzed again.
8. All precipitation samples collected in the same week should have similar ion concentrations. A large discrepancy, particularly in NH4-N or PO4, indicates contamination and the sample's data are not used. Contamination usually results from insects or birds.
9. The internal Coweeta soil reference sample is run with each soil cation analysis.
10. Samples frozen for later analysis are frozen with 3 DI blanks to be analyzed with the samples.

LABORATORY PROTOCOL

I. Laboratory Water (DI)

A Millipore Milli-Q Integral system is used to give two types of water, Type II and Type I (ultra-pure). The system has a 200 liter storage tank that uses UV to eliminate biological activity in the tank. Conductivity is checked weekly and should never exceed 1.0 uS/cm for the Type II water. The Ultra-pure water produced by the Milli-Q has a built in check for the resistivity which is maintained at 18.2 mega ohm cm.

II. Washing Procedures for Glassware and Sample Containers

Samples at Coweeta are characterized by very low concentrations of nutrients. The mean concentration for NO_3-N in a control watershed in 1992 was 6 μg/l. The need for careful washing of collection bottles cannot be overstated.

A. General Washing Procedures for Glassware and Plastic Bottles

USE THE SINK IN THE AUTOANALYZER LAB OR THE SOIL LAB

Safety: Wear goggles, lab coat and gloves.

1. Rinse out any non-hazardous liquids left in the glassware or plastic bottle into the sink. Hazardous liquids should only be disposed of by qualified technicians.
2. Wear gloves. Wash bottles and glassware in hot soapy water, using Liquinox soap and the proper brush for the size bottle.
3. Rinse bottles and glassware in tap water 5 times.
4. Rinse bottles and glassware in Type II deionized water 5 times.
5. Hang bottles and glassware on drying racks.
6. QC 1 out of every 20 bottles by filling with type I DI, letting sit for 2 hours and then check the conductivity. Conductivity should be 1.0uS or less. If not, all bottles must be rinsed again in DI and re-checked.
7. When bottles are dry, cap and put a piece of white label tape on each one. Cover glassware with a piece of plastic wrap.

B. General Washing Procedures for ICP and AA Vials and Glassware

USE THE SINK IN THE AUTOANALYZER LAB

Washing procedure with 5% Nitric acid (HNO3) rinse

Safety: Wear goggles, lab coat and gloves.

1.
2. Rinse out any non-hazardous liquids left in the glassware or tubes into the sink. Hazardous liquids should only be disposed of by qualified technicians.
3. Wash glassware and tubes in hot soapy water, using Liquinox soap and the proper brush for the size bottle, or vial.
4. Rinse glassware and tubes in tap water 5 times.
5. Fill volumetric 1/3 full with 5% HNO3, cover opening and sit overnight. Rinse 5 times using type II DI.
6. Soak tubes overnight in 5% HNO3 and then rinse in type II DI 5 times.
7. Hang to dry on designated rack.

C. General Washing Procedures for Soil Nitrogen Bottles and Centrifuge Tubes

USE THE SINK IN THE SOIL LAB

Washing procedure with 10% hydrochloric acid (HCl) rinse

Safety: Wear goggles, lab coat and gloves.

1. Rinse out any non-hazardous liquids left in the plastic bottle or tube into the sink. Hazardous liquids should only be disposed of by qualified technicians.
2. Wash plastic bottle or tube in hot soapy water, using Liquinox soap and the proper brush for the size bottle.
3. Rinse plastic bottle or tube in tap water 5 times.
4. Fill plastic bottles and tubes 1/4 full with 10% HCl acid. Invert, swirl and shake briefly (20 sec.). Allow the acid to sit overnight.

5. Rinse with deionized water 2 times.
6. Fill plastic bottles and tubes with deionized water and allow to soak at least 2 hours.
7. Empty and rinse with deionized water 2 - 3 times. Put on racks to dry.

D. General Washing Procedures for DOC glass vials and filtration equipment

USE THE SINK IN THE SOIL LAB

Washing procedure with 10% hydrochloric acid (HCl) rinse

Safety: Wear goggles, lab coat and gloves.

1. Rinse out any non-hazardous liquids left in the glassware into the sink.
2. Wash all glassware, vials and caps in hot soapy water using Liquinox.
3. Rinse in tap water 5 times.
4. Rinse with 10% HCl acid. Invert, swirl and shake briefly.
5. Rinse with type II DI 5 times.
6. Put on racks to dry.
7. Once dry, cover all glassware in aluminum foil and muffle for 4 hours at 450°C. Refer to Appendix IV, Section 6 – Use of Muffle Furnace for instructions and safety information.

E. General Washing Procedures for DOC storage Vials

USE THE SINK IN THE SOIL LAB

Washing procedure with 10% hydrochloric acid (HCl) rinse

Safety: Wear goggles, lab coat and gloves.

1. Rinse out any non-hazardous liquids left in the glassware into the sink.
2. Wash all glassware, vials and caps in hot soapy water using Liquinox.
3. Rinse in tap water 5 times.
4. Rinse with 10% HCl acid. Invert, swirl and shake briefly.
5. Rinse with type II DI 5 times.
6. Put on racks to dry.
7. Once dry QC 1 out of every 20 vials by filling with type I DI, letting vial sit for 2 hours and then analyzing for DOC/TN. Vials should contain less than 0.1mg/L DOC and less than 0.005 mg/L TN. If above the limit, all vials are rinsed again in type II DI and rechecked.
8. Cap vials and label with pink tape.

III. Acid washing for soil lysimeters using dilute hydrochloric acid

Safety and Disposal: Wear safety goggles, lab coat and gloves. Excess acid may be put down the sink. Follow with tap water for 1 minute.

This step is for new lysimeters only

Step 1

1. Remove the nalgene tubing; it does not need to be acid washed.
2. Rinse lysimeter with DI water and place into a 5gal bucket with enough DI to cover the porous cup.
3. Pressurize lysimeter and check for leaks by looking for air bubbles.

Step 2

1. Depressurize and remove DI.
2. Pour 100 – 250ml of 10% HCl acid inside the lysimeter. Place a stopper on the lysimeter and invert several times. Remove stopper and pour the acid down a drain.
3. Put the lysimeter into the empty bucket. Carefully add enough 10% HCl acid to bucket to cover the cup.
4. Pull a tension on the lysimeter. **Place a warning sign on the bucket indicating acid.** Allow to sit overnight.
5. Remove the acid from the lysimeter and the bucket and rinse both thoroughly with DI.
6. Add DI to bucket.
7. Pull DI thru the cup until the conductivity is below 5 uS/cm.

For used lysimeters:

1. Using a dry brush, clean off soil. If needed add DI and scrub.
2. Rinse with DI 5 times.
3. Place lysimeter into a 5gal bucket with enough DI to cover the porous cup.
4. Pull DI thru the cup until the conductivity is below 5 uS/cm.

IV. Preparation of PMA Preservative Solution

Safety and Disposal: Read the MSDS sheets for phenyl mercuric acetate and 1,4 dioxane. Wear safety glasses, lab coat, and gloves. Always work under a fume hood. 1,4 Dioxane is a carcinogen. 1,4 Dioxane may form explosive peroxides. See Appendix IV, Section 4 – Use of Reactives.

1. 2. Dissolve 0.1g phenyl mercuric acetate (PMA) $C_8H_8HgO_2$ in 15.0 ml of 1,4 dioxane. Use small glass beaker with magnetic stir bar under fume hood.
2. Add 85 ml of DI water and stir for 10 - 15 min. Solution may appear slightly cloudy.
3. Pour into 125 ml polypropylene bottle and label with date and a poison sticker.

4. **1,4 Dioxane and PMA should be handled with care and should be stored in the flammables cabinet**.
5. Bulk precipitation collection bottles receive 1.0 ml of the PMA solution. The amount of Hg in 1.0 ml of this PMA solution is 0.6 mg. The amount of bulk precipitation varies from 500 ml to 2000 ml so the concentration of Hg in a sample will vary from approximately 1.0 mg/l to 0.3 mg/l. This concentration range has been found sufficient to retard most biological activity.

V. Preparation of Soils for Chemical Analysis

Soil samples for Exchangeable Cations, Total Cations and CN are air dried prior to being sieved through a 2 mm sieve. A small subsample is powdered with a mortar and pestle, under the hood, prior to analysis on the Flash EA NC analyzer. Fresh soil samples for NH_4-N and NO_3-N extraction are sieved, under the exhaust hood, through a 6mm sieve and processed the same day.

VI. Sediment Protocol

Sediment samples are collected from Watersheds 2 and 7 when the ponding basins are cleaned out, approximately once a year.

VII. Preparation of Plant Tissue for Chemical Analysis

Plant tissue samples should be dried in the forced air ovens at 65° C to a constant weight prior to weighing. Dried material is then ground in the Wiley mill to pass through a 1mm sieve. Subsamples are collected and stored in 20 ml glass scintillation vials.
See Appendix IV sections 8 and 9 for Use of Ovens and Ball Mill Grinder.

PROCEDURES FOR THE ANALYSIS OF WATER

I. Procedure for Determining pH

Safety and Disposal – Wear safety glasses, lab coat and gloves. Waste can be put down the drain.

A. Materials and Equipment needed:
1. pH meter
2. 4.0 and 7.0 buffer for calibrating meter
3. stop watch

B. Procedure – See Electrometric Determination of pH and Titration for Bicarbonate in the instrument section for further instructions.
1. Calibrate the pH meter using the 4 and 7 buffer.
2. Rinse probe with DI and dry by dabbing lightly with lint free cloth.
3. Place pH probe in sample and time for two minutes.
4. Record the pH.

II. Procedure for Filtering Sample for DOC

Safety and Disposal – Wear safety glasses, lab coat and gloves. Waste can be put down the drain.

A. Materials and Equipment needed:
1. Millipore glass fibre prefilters Cat#APFF04700
2. Muffle Furnace
3. Filtration flask Filtration funnel, plus extra filter flask for waste
4. Glass vacuum filter holder
5. Vacuum pump
6. 40ml sample vials with screw top lid containing septa (can use parafilm instead of septa)
7. Organic free deionized water (Type I)

B. QC

When a shipment of filters are received they are checked for contamination before use by:
1. Note the lot numbers on each container.
2. Take 3 samples from each container (top, middle and bottom).
3. Muffle the filters.
4. Run DI through each filter treating each as a sample and analyze for TN and DOC.
5. If contaminated, soak all filters in type I DI and re-evaluate.

For each day filtering:
6. Include 3 filter blanks: Use type I DI and filter as a sample. Repeat 3 times with 3 filters.

C. Procedure
1. All glassware, sample vials, and filters are muffled at 450°C for 4 hours. See Appendix IV, Section 6 – Use of Muffle Furnace for instruction and safety.
2. Set up filtering device with filter paper and attach to the vacuum pump.
3. Rinse the filter paper and holder by filtering 30-50ml of sample into flask marked waste.
4. Move filtration funnel and holder onto the filter flask for sample collection and filter 50-100ml of sample.
5. Pour filtrate into 40ml sample vial. Cap sample.
6. Rinse filter flask, funnel and glass filter holder in organic free deionized water three times. Shake out excess water, prepare to filter next sample. The same filtration equipment can be used for like samples.

III. Compositing Water Samples

Samples are composited on a volume weighted basis or a set volume basis.

For Volume Weighted Basis: Each week, the collection volume of each sample is noted. The total volume for the month for each sample is then used to calculate what percentage of each sample is used for the total sample volume. A composite of 250 ml is made using these representative percentage calculations. Example: Lysimeter 118-1s

	Volume ml	Percentage of total	Amount needed for composite
Week 1	150	21	53.6
Week 2	200	29	71.4
Week 3	100	14	35.7
Week 4	250	36	89.3
Total =	700	100	250

For Set Volume: Some samples are composited using a set volume. Example: Linville Gorge Lysimeters are sampled twice a month; monthly composites contain 20ml from each sample date.

IV. Total Acidity in Water Samples

Total Acidity measurements must be done immediately.

Safety: Wear goggles, lab coat and gloves. See Appendix IV, Section 2 – Use of Bases.

A. Equipment:
1. Microburet

B. Reagents:
1. 0.0100N potassium biphthalate: dissolve 2.0425 g anhydrous $KHC_8H_4O_4$ and dilute to l liter with CO_2-free DI water.
2. 1N sodium hydroxide, NaOH: dissolve 40 g NaOH and dilute to 1 liter with DI water.
3. 0.01N NaOH: dilute 10.0 ml 1N NaOH with CO_2-free DI water to 1 liter. Make up and standardize weekly.
4. Phenolphthalein: dissolve 2.5 g phenolphthalein disodium salt in 250 ml DI water and 250 ml ethyl alcohol.

C. Procedure:
1. Standardize the 0.01N sodium hydroxide, NaOH.
   a. Use 25 ml of $KHC_8H_4O_4$ in flask
   b. Add 1 drop 0.1N sodium thiosulfate to the $KHC_8H_4O_4$
   c. Add 3 drops phenolphthalein
   d. Titrate with NaOH until get faint pink (pH of 8.3)
   e. Repeat two more times
   f. Normality of NaOH = $\frac{\text{ml } KHC_8H_4O_4 \text{ x Normality of } KHC_8H_4O_4}{\text{ml NaOH}}$

2. Determine acidity of samples
   a. Use 100 ml of sample
   b. Add 1 drop of 0.1N sodium thiosulfate
   c. Add 3 drops phenolphthalein
   d. Titrate with 0.01N NaOH until see faint pink
   e. Calculation of acidity as:

$$\text{mg/l } CaCO_3 = \frac{\text{mlNaOHxNormality of NaOHx 50,000}}{\text{ml sample}}$$

V. Total Alkalinity in Water Samples

Total Acidity measurements must be done immediately.

Safety: Wear goggles, lab coat and gloves. See Appendix IV, Section 1 – Use of Acids.

A. Equipment:
1. Microburet
2. pH Meter

B. Reagents:
1. Stock sulfuric acid, 0.1N: 2.8 ml of concentrated H_2SO_4 diluted to 1 liter DI water.
   CO_2-free DI water: prepare fresh as needed by boiling DI water for 15 minutes and cooling rapidly

to room temperature. Cap the flask with an inverted beaker while cooling.

2. Sulfuric acid, 0.01N: dilute 100 ml of 0.1N stock to 1 liter with CO_2-free DI water. Make up weekly.
3. Sodium hydroxide, NaOH, 0.01N: see Total Acidity.
4. 0.1N sodium thiosulfate: dissolve 25 g $Na_2S_2O_3.5H_2O$ in 1 liter DI water.
5. Mixed bromcresol green-methyl red: dissolve 20 mg methyl red sodium salt and 100 mg bromcresol green sodium salt in 100 ml DI water.

C. Procedure:

1. Standardize the 0.01N sulfuric acid against NaOH of known concentration
   a. Use 25 ml of 0.01N NaOH
   b. Add 1 drop 0.1N sodium thiosulfate
   c. Add 3 drops mixed bromcresol green-methyl red indicator
   d. Titrate with ~ 0.01N sulfuric acid until solution turns pale orange. Solution will go from blue to gray to pale orange.
   e. Repeat two more times
   f. Normality of H_2SO_4 = $\frac{\text{mlNaOHxNormality of NaOH}}{\text{ml } H_2SO_4}$
2. Determine alkalinity of samples:
3. use pH meter
   a. Use 100 ml of sample
   b. Titrate with 0.01N H_2SO_4 and record volume (C) required to reach pH 4.5
   c. Continue to titrate and record total volume (D) needed to reach pH 4.2
   d. Total alkalinity as: mg/l $CaCO_3$ = $\frac{\text{(2C-D) x N of H2SO4 x 50,000}}{\text{ml of sample}}$

VI. Determination of Bicarbonate as CaCO3 - See Electrometric Determination of pH and Titration For Bicarbonate in instrument section for further details.

Safety: Wear safety glasses, lab coat and gloves.

Procedure:

1. Measure out 25ml of sample into beaker.
2. Note pH of sample.
3. Using 0.01N H2SO4 titrate sample to point where last drop gives a pH just below 4.5.
4. Record the ml used.

Bicarbonate as mg/L $CaCO_3$ = ((4.5x10-7)(total alkalinity))/(H+ + (4.5x10-7))

VII. Method for Nitrogen Analysis of Dry Deposition

A monthly composite of the weekly collection for the dry deposition (DWS) and the Blank are made.Each composite is filtered, using the liquid filtrate to measure total dissolved Nitrogen on the Shimadzu; the particulates remaining on the filter paper are used to measure total dry deposition N on the Flash EA1112.

Safety: See Appendix IV, Section 8 – Use of Ovens.

A. Procedure

1. Collect sample weekly from DWS-1 and DWS-2 plus 2 Blanks which contain lab DI water.
2. Composite the above monthly combining DWS-1 and DWS-2 into one sample and the Blanks into a second sample.
3. Measure the volume of DWS composite and the volume of Blank composite.
4. Filter each composite as follows:
   a. Rinse several disks of Whatman 934-AH 25mm filter paper with DI water.

b. Dry the filter paper and then muffle at 450°C for 4 hours.
c. Weigh filter separately.
d. Filter each composite. See section VIIIB.
e. **Set aside a sample of each liquid filtrate** for TN analysis on the Shimadzu.
f. Dry paper at 65°C (until dry). Weigh paper again. The weights are used for turbidity data. Use this sample for N analysis on the Flash.

B. Calculations:

1. Measure filtered contents for total dissolved nitrogen on Shimadzu (see instrument section).
2. Measure particulates on filter for %N using the Flash (see instrument section).
3. Calculate mg/L N from %N (obtained from Flash) as follows: (%N/100)x(amtweighedoutforFlash) / ((Total Volume used for filtrate)/1000ml/L)

Calculate the weighted amount of NO3 as follows:

Use the value obtained from the IC for NO3-N in mg/L minus the value of the blank for each week collection included in the monthly composite times weighted volume.

NO3 –N wtd = ((weekly valueNO_3-N mg/L- blk value NO_3-N mg/L) x (volume for week NO_3 measured/monthly volume) TKN = TNmg/L+N_{flash}-NO_3
TDN= TNmg/L-NO_3

VIII. Turbidity – Total Suspended Solids (TSS)

Safety: Wear safety glasses. See Appendix IV, Section 8 – Use of Ovens, Appendix IV – Section 6 - Use of Muffle Furnace.

Equipment: Vacuum pump, Millipore filtering apparatus, Whatman GF/C glass 1.5 micro fiber filter paper, 5.5 cm or 2.5 cm. Do not handle filters with your fingers or drop on the floor. If you do, throw it away. Filters used for total carbon and nitrogen analysis (2.5 cm) or volatile solids must be muffled at 550°C prior to use. Note - Can use Fisher Brand G4 filters cat# 09-804-55C for TSS only.

A. Procedure for TSS only:

1. **Clean filters:** Holding filter with flat bladed tweezers, rinse both sides of the filter with a squeeze bottle filled with DI. Using the tweezers, place the filter on vacuum filtration and filter 500 ml of deionized water through each filter. Wash at least four (4) more filters than there are samples. These will serve as blanks.
2. Place on aluminum foil. Cover with a towel to prevent filters from flying off while transporting to oven.
3. Dry in oven for 1 1/2 hours at 125°C. Note: If a filter is dripping wet it will stick to the foil during drying.
4. Weigh each filter, recording the weight. Do not remove more than 5 filters from the oven at a time.
5. **Filter samples**, recording the mls of sample filtered. Use the entire sample if the sample is very clear. Hopefully, this will be at least 700 mls. DI can be used to obtain sediment left in graduated cylinder and funnel if needed. Do not include as volume**. SHAKE SAMPLE THOROUGHLY BEFORE FILTERING!**
6. Wash extra filters second time with average volume used for samples.
7. Rinse filter holders between samples.
8. Dry filters in oven for 2½ hours at 105 °C .
9. Weigh each filter, recording the weight in grams to five decimal places.
10. Calculations: (final wt mg - initial wt mg) x 1,000ml/L / vol. filtered ml =mg/L suspended sediment

B. Procedure for Turbidity, total carbon and total nitrogen on filters:

1. Use pre-muffled 2.5 cm Whatman GF/C glass 1.5 microfibre filters. Whatman Glass Micro filters 934-AH. Fisher cat#1827025.
2. Assemble the small filter holder (2.5 cm) apparatus and filter 15 ml of DI water.

3. Carefully remove filter with forceps and place on pre-numbered aluminum foil.
4. Dry in oven for 1 1/2 hours at 125°C.
5. Weigh each filter, recording the weight to five decimal places.
6. Filter samples, recording the mls of sample filtered. SHAKE SAMPLE THOROUGHLY BEFORE FILTERING! Clear samples will require 1000 to 3000 mls of water in order to collect enough particulates to analyze for total carbon and total nitrogen. Samples with a lot of sediment or pollen may only require 200 to 500 mls of water.
7. Dry in oven for 2 1/2 hours at 65°C. **DO NOT DRY AT 125°C!**
8. Weigh each filter, recording the weight in grams to five decimal places.
9. Calculations: (final wt mg - initial wt mg) x $\frac{1{,}000 \text{ml/L}}{\text{ml vol. filtered}}$ = mg/L suspended sediment
10. Refer to instrumental section on Combustion Analysis of Total Carbon and Nitrogen in Soil and Plant Tissue Samples for instructions for analysis of total carbon and total nitrogen on the filters.

C. Procedure for Volatile Solids
1. Follow part A -procedure for TSS, using premuffled filters. After step 9, place the filter in a pre-muffled crucible. Record the weight of the filter + crucible before and after muffling.
2. Calculation:mg Volatile Solids/L = (final wt mg – initial wt mg)/sample volume L

IX. Recovery of Adsorbed Ions from Ion Exchange Resins

See Appendix V – Miscellaneous for instructions on filling columns

You will make two extractions of the beads from each column. Extraction 1 occurs from the column into a 250ml bottle. Extraction 2 occurs in the 250ml bottle. Amberlite IRN 150 mixed resin beads were used to pack the columns.

Safety and Disposal : Wear safety goggles, lab coat and gloves. Unused extractant can be disposed of down the drain under the hood.

A. Equipment:
1. Label Tape
2. 250 ml Nalgene Bottle (one per sample)
3. 50 ml Centrifuge Tube (one per sample)
4. 4-5 Squirt Bottle for KCl solution
5. New Brunswick Scientific Shaker Box for Brunswick Shaker
6. 10ml pipette and tips

B. Reagents:
1. For 2N KCl – to a 1L volumetric containing about 500 ml Type II DI add 149.1g KCl. Stir on stir plate until dissolved. Remove magnetic stir bar. Fill to the mark with DI and mix by inverting the flask 20 times.
2. For QC: 5ppm NO3, NH4 and PO4 – to a 500 ml volumetric flask containing about 250 ml Type I DI, add 2.5 g each Ricca Standards:
   Cat# 5455-16 Nitrogen Cat# 5839-16 Phosphate Cat# 5459-16 Nitrogen
   Fill to the mark with DI and mix by inverting the flask 20 times.
3. For QC: 50ppm NO3, NH4 and PO4 – to a 500 ml volumetric flask containing about 250 ml Type I DI, add 25 g each Ricca Standards:
   Cat# 5455-16 Nitrogen Cat# 5839-16 Phosphate Cat# 5459-16 Nitrogen
   Fill to the mark with DI and mix by inverting the flask 20 times.

C. Procedure:
1. Label 250ml bottles to correspond to columns.
2. Label 50ml vials.
3. After mixing KCl label 4-5 squirt bottles with “2 *N* KCl.”

4. Fill squirt bottle with 100ml of 2 *N* KCl before each column extraction.
5. Hang column vertically by clamping onto a buret stand using a wrist action clamp and place the corresponding 250ml bottle under the column.
6. Remove top poly-fill using tweezers.
7. Remove bottom cap and poly-fill using tweezers. The 250ml bottle must by under the column while removing the poly fill because some resin beads may fall out.
8. Gradually dispense 100 ml of 2 *N* KCl solution with the squirt bottle into the top of the column. Go slowly. The solution may bubble up and over the column otherwise. This should force the resin beads into the beaker. Take it slow allowing the beads to drop out.
9. Shake KCl and beads in the caped 250ml bottle for 20 minutes on New Brunswick Scientific shaker at 250 rpms.
10. Allow the beads to settle to the bottom of the 250ml bottle.
11. Then pipette a 20 ml sub-sample into the corresponding 50 ml centrifuge tube. The remaining extractant may be discarded.
12. Pour off as much extractant as possible.
13. Add another 100 ml of 2N KCl to the 250ml bottle with resin beads. Shake for 20 minutes.
14. Then pipette a 20 ml sub-sample into the 50 ml centrifuge tube from step 11. You will now have a total of 40ml sample. The remaining extractant may be discarded.
15. QA/QC: Include a KCL blank with every 10 samples. Check the retention capacity of the beads by pouring 100 ml each,into 3 resin filled columns,a solution containing 5ppm NO3, NH4 and PO4. Repeat for a 50ppm solution of NO3, NH4, PO4. Collect what flows out in 50ml vials and label as thrufall. Go to step 5 and extract as a sample.
    Blank: Use 3 extra columns filled with beads but no sample for a resin bead blank. You will follow the same procedure as the sample.
16. Resin column beads can be discarded in the trash.
17. Samples can be frozen and stored.
18. Analyze samples for ammonium, nitrate, and phosphate.

Example of resin column in stand

Reference

Fenn, M., Blubaugh, D., Alexander, D., and Jones, D. (2013) Using Ion Exchange Resin Columns to Measure Throughfall and Bulk Deposition to Forests. USDA Forest Service, Pacific Southwest Research Station.

PROCEDURES FOR THE ANALYSIS OF SOILS

I. Preparation of Soils for Chemical Analysis

Soil samples for Exchangeable Cations, Total Cations and CN are air dried prior to being sieved through a 2 mm sieve. The soil is sieved under the exhaust hood located in the back room of the lab. A small subsample is powdered with a mortar and pestle (under a hood) prior to analysis on the Flash EA NC analyzer. Fresh soil samples for NH_4-N and NO_3-N extraction should be sieved through a 6mm sieve and processed the same day.

II. Exchangeable Soil Cations

A. NH4Cl extraction for cation concentration and Effective Cation Exchange Capacity Exchangeable cations (Ca, Mg, K, Na, Al,) can be extracted using a mechanical vacuum extractor.

Safety and disposal: Wear safety glasses, lab coat and gloves. Excess extractant can be placed down the drain. Follow with tap water for a minute.

1. Equipment:
   a. Centurion mechanical vacuum extractor
   b. Extraction tubes and syringes (see figure below)
   c. Connector tubing - 24 pieces/ 13cm long
   d. Felt and frits, purchased from Sample Tek, Science Hill, KY. Frit #9326 Felt #9316
   e. Balance

2. Reagents:
   a. 1M NH_4Cl - dissolve 53.5 grams NH_4Cl in 1 liter deionized water.
   b. 1M KCl - dissolve 74.55 grams KCl in 1 liter deionized water.
   c. Ethanol

3. Procedure

Day 1
   a. Weigh 10g of soil (record weight), and put into labeled extraction tubes.
   b. Label both upper and lower tubes.
   c. Place extraction tubes in the upper tray of the extractor. Include a blank (no soil), and a reference standard for every 10 to 12 samples. See Figure below.
   d. Place vacuum extractor tube in bottom tray. Attach tips of the upper and lower tubes together with rubber tubing. Be sure tubing is not too long or the syringes may fall out.
   e. Fill extraction tubes (upper reservoir) with 50 ml 1M NH_4Cl solution.
   f. Set control wheel and extract for 12 hours. This will extract exchangeable Ca, Mg, K, Na, and Al.

Day 2
   a. Empty the contents of vacuum extractor (lower syringes) into clean labeled sample bottles.
   b. Re-attach extraction tubes, making sure that the vacuum extractors remain with its respected original extraction tube to prevent contamination.
   c. Fill extraction tubes with 50 ml ethanol. Turn on overhead exhaust.
   d. Set control wheel for 1 hour and extract. This will flush out interstitial NH_4-N.
   e. Discard contents of vacuum extractor, no analysis needed.
   f. Re-attach extraction tubes, making sure that the vacuum extractors remain with its respected original extraction tube to prevent contamination.
   g. Fill extraction tubes with 50 ml 1M KCl solution. This will extract NH_4-N on exchange sites.
   h. Set control wheel and extract for 12 hours.

Day 3
   a. Empty the contents of vacuum extractor (lower syringes) into labeled sample bottles.

4. Analysis:

a. Analyze KCl as soon as possible on the autoanalyzer system for NH4-N. Can freeze the sample if analysis is delayed.
b. Analyze NH_4Cl as soon as possible on the ICP for Ca, Mg, K, Na and Al. Freeze the sample if cation analysis is delayed.

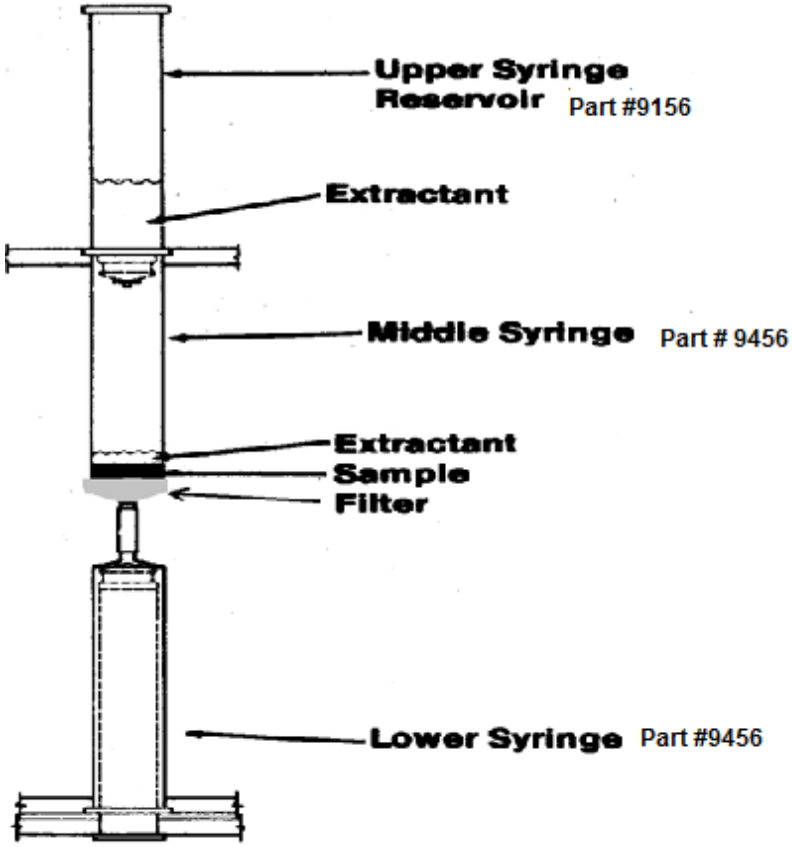

B. Double Acid Method - Exchangeable Soil Cations Extraction

Safety and Disposal: Wear safety goggles, lab coat and gloves. See Appendix IV, Section 1 – Use of Acids. Excess extractant can be discarded down the drain located in the hood. Follow with tap water for 1 minute.

1. Equipment:
   a. 50 ml capped centrifuge tubes, acid-washed
   b. Shaker box and shaker table
   c. Centrifuge

2. Reagents:
   Double-acid extraction solution: Add 12.15 ml HCl and 2.1 ml H_2SO_4 to 2 liters of DI water. Dilute to 3 liters with type II DI water.

3. Procedure: Do not work with more than 24 samples at a time.
   a. Sieve dry soil through #10 mesh sieve (2 mm) under the exhaust in the back room of the lab.
   b. Weigh 5.0 g ±.05g dried soil into tube; record exact weight.
   c. Add 20 ml extraction solution to each vial. Prepare 4 or 5 reagent blank vials and 3 standard reference samples.
   d. Place tubes horizontally in wooden shaker box and shake for about 15 minutes.
   e. Centrifuge samples at 8000 rpm for 10 min or until clear. Pipette into acid washed plastic bottles.
   f. Store in refrigerator and analyze within 1 week.

4. Analysis:
   Analyze on the ICP. Make up standards and blanks in extraction solution.

C. Cation Exchange Capacity (NH_4Ac)

Safety and Disposal: Wear safety goggles, lab coat and gloves. See Appendix IV, Section 1 and 2 – Use of Acids and Use of Bases. . See Appendix IV, Section 7 – Use of Centrifuge. Excess extractant can be discarded down the drain located in the hood. Follow with tap water for 1 minute.

1. Equipment:
   a. 50 ml capped centrifuge tubes, acid-washed
   b. Shaker box and shaker table
   c. Centrifuge

2. Reagents:
   1N ammonium acetate
   a. In a 1 liter flask add 600 ml DI water.
   b. Add 58.0 ml of Acetic Acid
   c. Add 70.0 ml of NH_4OH
   d. Dilute to 1 liter with DI water.
   e. Adjust pH to 7 with Acetic Acid or NH_4OH

   Procedure:
   1. Weigh 5.0 grams of sieved (2mm) air dried soil into labeled centrifuge tube.
   2. Add 25 ml of 1N NH_4Ac
   3. Cap and shake sideways for 30 minutes.
   4. Centrifuge for 10 minutes at 8000 rpm.
   5. Pour off supernatant into weighted 60 ml plastic bottle.
   6. Repeat steps 2 – 5 and bring final weight to 50 grams with 1N NH_4Ac.
   7. Shake bottle by hand to insure mixing.
   8. Run 3 blanks and 3 standard reference samples through the procedure.
   9. Analyze on the ICP.

III. NH4 - NO3 Extraction Procedure (Soil and Forest Floor)

Safety: Wear safety goggles, lab coat and glasses. See Appendix IV, Section 7 – Use of Centrifuge.

A. Equipment:
   1. Centrifuge tubes, 50 ml
   2. Shaker box
   3. Centrifuge
   4. 6mm sieve
   5. 15 ml transport tubes
   6. Re-pipettor
   7. Aluminum weigh tins

B. Reagents:
   1. Potassium chloride extraction solution (2M KCl): Dissolve 149 g KCl in 800 ml DI water and swirl solution. Dilute to 1 liter. Note: This is an endothermic reaction.

C. Procedure: **Set up a work area where you can weigh the bag of soil, weigh soil into the centrifuge tube, weigh soil into weigh tins, and put KCl into centrifuge tubes with soil.**
   1. Sieve soil using 6mm sieve. Return to bag.
   2. Weigh the bag with soil. Determine the bag weight by taking the average of 10 empty bags.
   3. Weigh 5.0 g ($\pm$ 0.05 g) of fresh sieved soil (6mm sieve) or weigh 2-3 g of O_a litter into a 50 ml centrifuge tube. Record exact weight.
   4. Add 20 ml KC1 extraction solution to each tube (use re-pipet, 20 ml capacity). Include 4-6 blanks.
   5. Place tubes into wooden shaker box.
   6. Turn wooden box upside down approximately 10 times.
   7. Place wooden box on shaker table for approximately 1 hour at medium speed - 200-300 rpm;

remove from shaker.

8. Centrifuge at 8000 rpm for 10 min. Pipette the solution into labeled clean 15 ml plastic centrifuge tubes. You do not want soil in the solution, if necessary centrifuge again. Store in the refrigerator at 4°C.
9. Analyze as soon as possible on the Astoria system for NH_4-N and NO_3-N. All standards, blanks, and QC standards are made up in 2M KCl using KCl with same or similar NO_3 contamination as that used in step 5. Freeze the sample if analysis is delayed.
10. Determine soil moisture by weighing approximately 10g of soil into tin pan. Record the weight. Dry in a 100°C oven. Weigh the dried soil and tin and record the weight.

Note: It is important to get the soil in KCl as soon as possible and weigh out the soil for soil moisture. The rest of the procedure can be performed the next day if necessary.

IV. Mehlich I PO4 Extraction

Safety: Wear safety goggles, lab coat and glasses. See Appendix IV, Section 7 – Use of Centrifuge.

A. Equipment:
1. 50 ml capped centrifuge tubes, acid-washed
2. Shaker box and shaker table
3. Centrifuge

B. Reagents:
1. Double-acid extraction solution. Add 12.15 ml HCl and 2.1 ml H_2SO_4 to 2 liters of DI water. Dilute to 3 liters with DI water.

C. Procedure:
1. Sieve dry soil through #10 mesh sieve (2 mm).
2. Weigh approximately 5.0 g ±.05g dried soil into tube; record exact weight.
3. Add 20 ml extraction solution to each vial. Prepare 4 or 5 reagent blank vials and 3 standard reference samples.
4. Place tubes horizontally in wooden shaker box and shake for about 15 minutes.
5. Centrifuge samples at 8000 rpm for 10 min or until clear. Pipette into acid washed plastic bottles.
6. Store in refrigerator and analyze within 1 week.

D. Analysis:
Analyze on the ICP. Make up standards and blanks in extraction solution.

V. Nitrification: 30-Day Soil Laboratory Incubation

A. Equipment:
1. 2 mm sieve
2. 250 ml polyethylene bottles
3. Incubator

Safety: Wear safety goggles, lab coat and glasses. See Appendix IV, Section 8 Use of Ovens.

B. Reagents:
Potassium chloride extraction solution (2M KCl): Dissolve 147 gm KC1 (Use KCl purchased from Sigma. This vendor appears to have lower NO3 contamination) in 800 ml DI water and swirl solution. Dilute to 1 liter. Mix well.

C. QC - Use a certified or in house soil reference. A minimum of 3 blanks and 3 references are used for each extraction set.

D. Procedure:
1. Sieve field-moist soil through 6 mm openings under the exhaust hood located in the back room of the lab.
2. Initial NO_3 and NH_4 concentrations were determined in triplicate for each composited soil sample by extracting 5 g of fresh soil with 20 ml of 2 M KCl.

3. Soil moisture content was determined by drying a 10g sample overnight at 105°C. Dry one subsample at 105°C until constant weight is achieved.
4. Determine % moisture (90% of dry wt.) $= \frac{\text{wet-dry}}{\text{dry}}$
5. Place 10 grams of soil in 0.94L bottle and adjust moisture content to 33% of dry weight. Jars were covered with plastic wrap and soil moisture was adjusted weekly as necessary.
6. Incubate for 30 days at 25°C.
7. After 30 days, 40 ml of 2 M KCl was added to each jar plus soil to extract NO_3 and NH_4-N. Nitrification rates equal NO_3 concentration at 33 days minus NO_3 at time zero. Nitrogen mineralization rates equal as NH_4+NO_3 at 33 days minus NH_4+NO_3 at time zero.

VI. Resin Membrane Anion and Cation Sheets

Methods Sheet SPWQ-001, Wesley M. Jarrell, September 1996
Type AR204-SZRA (anion exchanger), or CR67-HMR (cation exchanger), Ionics, Inc.; available from Soil Plant, Water Quality, Inc., 12505 NW Cornell Road, Portland, OR 97229, (503) 641-0560 or (503) 671-0855; e-mail wjarrell@esc.ogi.edu

Safety: Wear safety goggles, lab coat and glasses. See Appendix IV, Section 1 Use of Acids.

A. Equipment:
1. 10 cm Petri dishes
2. Resin sheets cut into 5 cm by 5 cm squares
3. Shaker table and box
4. Plastic zip lock bags

B. Reagents:
1. 0.5 M $NaHCO_3$ – Dissolve 42.0g of $NaHCO_3$ in 900 mL of DI water and dilute to 1L.
2. 0.5 M HCl – Into 900 mL of DI water, slowly add 41.5 mL of concentrated HCl acid and dilute to 1L.
3. 2.0 M HCl - Into 900 mL of DI water, slowly add 166 mL of concentrated HCl acid and dilute to 1L.
4. 500ppm KH_2PO_4 – 0.71639 KH_2PO_4 to 500ml distilled water in a 1L volumetric flask. Fill to the mark with DI.

C. QC - Use a certified or in house soil reference. A minimum of 3 blanks and 3 references are used for each extraction set.

D. Procedure:
A variety of resin-impregnated membranes are available. Those from Ionics, Inc. have been found to be most robust and reliable in the field.

Membrane size:
Membranes are normally prepared by first cutting into 5 cm by 5-cm squares or 5 cm by 2.5 rectangles, although other sizes are acceptable.

Preparation of resin-impregnated membranes:

Anion exchange resin:
These typically arrive from the supplier saturated with Cl. However, in most cases both Cl and OH have higher affinities for the resin than does P, so saturation with a weakly held anion, bicarbonate, effectively increases the membrane's affinity for P. Cover anion membranes with 2 M HCl in a beaker and shake for 10 minutes. Rinse with DI water. Membranes are converted to the bicarbonate form by covering them with 0.5 M $NaHCO_3$ in a beaker and shaking for 10 minutes. This procedure is repeated again twice (a total of three saturations), rinsing with DI water between each step. Make sure that both

sides of the membrane are exposed to the solution, and that they not be stored more than 10 days after saturation in most cases. Put six buffered sheets in 100ml of 500ppm KH_2PO_4 contained in a 500ml beaker. Cover with plastic wrap and store in the refrigerator. These will be desorbed and analyzed at the same time the sample sheets are brought in and desorbed. This will allow a history of absorption to be documented.

Cation exchange resin:
Follow the same procedure for anion sheets, rinsing first with 2M HCl then using the 0.5 M $NaHCO_3$ solution. Put six buffered sheets in 100ml of 500ppm KH_2PO_4 contained in a 500ml beaker. Cover with plastic wrap and store in the refrigerator. These will be desorbed and analyzed at the same time the sample sheets are brought in and desorbed. This will allow a history of absorption to be documented.

Installation:
Ion sinks Membranes are placed in the soil beneath a soil core removed with a bulb planter, soil is replaced carefully to minimize disturbance. They can be placed at any depth; in most cases, the primary root zone is the region of greatest interest. One cation sheet and one anion sheet can be placed at each location. They can then be treated as a unit through desorption and analysis phases.

Time of exposure:
The membranes are left in place for up to 2 weeks. Beyond this time the membrane may no longer maintain a near-zero concentration of P or nitrate at its surface; if the concentration near the surface becomes significant and interpretation is complicated. They can be left in longer, but they may load up with ions and no longer maintain a zero concentration boundary condition.

Collection:
The ion sink should be gently removed from the soil, although slight scraping causes little change in amount extracted. Clinging soil particles should be removed gently with a rubber spatula. A small amount of soil on the membrane will not cause problems in the extraction. When returned to the lab the membrane is rinsed with deionized water to remove any additional soil prior to cation extraction. The membranes are relatively rugged and mild abrasion does not affect results. The membranes should be kept moist, e.g., in a ziploc bag with a few drops of deionized water, prior to desorption. However, in most cases, drying does not appear to adversely affect sorption properties.

Desorption:
The ion sink is dabbed dry with a clean cloth, placed in 25 ml of 0.5 M HCl in a Petri plate, and gently shaken for 20 to 30 hours. The desorption sample solution can be stored in polyethylene bottles for analysis using appropriate laboratory techniques. Include the resin sheets in KH_2PO_4 stored in the refrigerator for desorption.

E. Analysis:
Analyze K, Ca, Mg, and P on the Inductively Coupled Plasma Spectrometer.
Analyze NO_3-N, and NH_4-N, on the Alpkem autoanalyzer.

Data analysis:
The time factor t (seconds) is recorded when the sample is collected. To determine Mt, divide the total amount of ion extracted from the resin, μmoles, by the surface area of the resin. For a 5 cm X 5 cm sheet, with one side in contact with soil, the area is 25 cm2. If both sides of the ion sink are exposed to soil, then both sides are counted in the area term (50cm2 for the above example). To best compare basic fertility among similar sites, ion sinks should be inserted after a soaking rain, irrigation, or thoroughly wetted just prior to installation, to make water content more comparable among treatments.

VII. Phosphate Extractable Sulfate

Safety: Wear safety goggles, lab coat and glasses. See Appendix IV, Section 7- Use of Centrifuge.

A. Equipment:
1. 50 ml capped centrifuge tubes, acid-washed
2. Shaker box and shaker table
3. Centrifuge

B. Reagent:
Sodium phosphate (Na_2HPO_4 H_2O) 0.016 M (500 mg P/L) - Dissolve 4.54 g Na_2HPO_4 in DI and dilute to 2.000 L or for Potassium phosphate (K_2HPO_4) use 4.35g in 2L.(either will give 500mg P/L).

C. Procedure: Do not work with more than 24 samples at a time.
1. Weigh out 2.000 g of air-dried soil into 50 ml centrifuge tube.
2. Add 15 ml of 500 mg P/L solution.
3. Shake tube and contents for 30 minutes on shaker table.
4. Centrifuge for 10 minutes at 1500 rpm. Decant supernatant into a clean 50 ml disposable centrifuge tube.
5. Repeat extraction and centrifugation (Steps 2, 3, and 4) two times for a total of three extractions. Combine all 3 supernatants.
6. Filter the solution through a 0.45 µm membrane filter and place in a LPE bottle.
7. Store the solution at 3°C and analyze for sulfate by Inductively Coupled Spectroscopy within 24 hours if possible. Immediate analysis is desirable because biological activity in this nutrient-rich extract may reduce the concentration of sulfate in solution. Sample can be frozen if analysis is delayed.

D. Quality Control:
2 blanks and 2 NIST Estuarine soil standards are run with each set of 24.

E. Analysis:
Make all standards in phosphate used for extraction.

Note: Before October 2012 samples were analyzed on the Dionex IC2500 ion chromatograph.

VIII. Langmuir sulfate adsorption isotherms were generated for soil samples using a modified method as described by Harrison et. al. (1989) and Strahm and Harrison (2007)

Safety – Wear safety glasses, lab coat and gloves.

A. Equipment: See page 19 in this document
1. Centurion mechanical vacuum extractor
2. Extraction tubes and syringes (see figure below)
3. Connector tubing - 24 pieces/ 13cm long
4. Felt and frits, purchased from Sample Tek, Science Hill, KY. Frit #9326 Felt #9316
5. Balance
6. Dispensette capable of delivering 25ml of solution.

B. Reagent:
1. 0.01M $Ca(H_2PO_4)_2$ - Add 5.04g $Ca(H_2PO_4)_2 \cdot H_2O$ (M.W. 252.07) to a 2L volumetric flask containing 1000 ml of type II DI. Fill to the mark with DI. You will have to add 0.3ml .3ml H_3PO_4 per liter to get the $Ca(PO_4)_2$ to dissolve.
2. K_2SO_4 f.w. 174.26: 0.1mmole/L: add .0174g K2SO4 to a 1L volumetric containing 500ml type II DI. Fill to the mark with DI. Following the above make up the further concentrations using .0435g for .25mmole, .0870g for .5mmole, .174g for 1 mmole and 0.87g for 5mmole.

Note: Make up the above solutions as needed, not before.

C. QC - Use a certified or in house soil reference. A minimum of 3 blanks and 3 references are used for each extraction set.

D. Procedure:

1. Set up mechanical extractor and syringes for extraction process. See page 19 of this document for example of syringe set up.
2. Weigh 5.0 g soil in syringe. (5 g Sample #1)

Step 1 - Native SO_4 determination (5 g Sample #1)

a. Native SO_4 desorption; Add 25 ml of DI to each syringe. Allow mechanical extractor to run for one hour. After an hour collect sample in 50ml vial and record volume. Repeat until SO_4 concentration is <0.005meq/L, approximately 4 extractions.

b. Extract finally with 0.01 M $Ca(H_2PO_4)_2$ –3 times.

Notes: Extract soil with solution for 1 hr. Analyze supernatant for SO_4. Record final solution volume for the first extraction to estimate retention by soil following extraction to allow correction of solution concentration.

Step 2 - Soil SO_4 adsorption. (5 g Sample #2)

Extract 5 g of soil on mechanical extractor with 25 ml of solution in the following sequence with K_2SO_4 solution in the following concentrations: 0.1, 0.25, 0.5, 1.0, 2.5, 5.0 mmol SO_4-S/ L.

Add 2-3 drops toluene per sample(first extraction only) to inhibit any biological activity. Use the same 5 g sample for all SO_4 concentrations.

Extract soil with solution for 1 hr. Analyze supernatant for SO_4. Record final solution volume for the first extraction to estimate retention by soil following extraction to allow correction of solution concentration.

IX. Soil Bulk Density Determination

Safety: Wear safety glasses, lab coat and gloves. See Appendix IV, Section 8 – Use of Ovens.

A. Equipment:

1. 2mm sieve and 6mm sieve
2. Soil jars

B. Procedure:

1. Collect 'intact' soil core, as much as possible.
2. Place entire soil core sample in jar of known weight.
3. Oven dry at 105°C. Weigh entire jar for total weight.
4. Under the exhaust hood, sieve through 6 mm sieve, Weigh < 6 mm fraction.
5. Under the exhaust hood, sieve through 2mm sieve. Remove organic materials, roots, etc. and weigh.
6. Weigh < 2mm fraction.
7. Record following weights: Total core. < 2mm fraction. Organic fraction

X. Soil pH Procedure - H2O and 0.01M CaCl2

A. Equipment:

1. pH meter
2. paper cups
3. glass rod

Safety: Wear safety glasses, lab coat and gloves.

B. Reagent:

1. pH buffers 4 and 7
2. 1M $CaCl_2$ - dissolve 14.7g $CaCl_2$ in 100 mL DI water.
3. .01M $CaCl_2$ – dilute 1M $CaCl_2$ – 10mL in 1 liter DI water.

C. Procedure:

See Electrometric Determination of pH and Titration for Bicarbonate in the Instrument Section for details on using the pH meter.

1. Weigh 5 g of air-dried soil into 4oz paper cup.
2. Add 10 ml of 0.01M $CaCl_2$ to each cup.
3. Mix thoroughly for 5 seconds by swirling cup.
4. Let stand 30 minutes – swirling several times during the 30 minutes.
5. Insert electrodes into container and stir soil suspension by swirling around electrodes slightly
6. Read pH immediately on standardized pH meter. Record as soil pH in 0.01M $CaCl_2$.

Note: some studies may call for pH measured in DI H_2O—procedure is the same, except use DI.

XI. Exchangeable Acidity in Soils (Adams Buffer Method)

Exchangeable acidity (cmol H+) is determined by pH change in a 1:2 soil: Adams and Evans buffer slurry. Cmol H+ was calculated from the change in buffer pH (8.0), 0.8 cmol H+ kg^{-1} soil for every 1.0 unit pH decrease.

Safety: Wear safety goggles, lab coat and gloves. Make up buffer solution under the hood. See Appendix IV, Section 2 – Use of Bases.

A. Equipment:

1. pH meter
2. paper cups
3. glass rod

B. Reagent:

1. Buffer Solution:Add the following to a 1 L volumetric containing 500ml type I DI:
   a. p-Nitrophenol 20.0g
   b. Boric Acid (H_3BO_3) 15.0g
   c. Potassium Chloride (KCl) 74.0g
   d. Potassium Hydroxide (KOH) 10.5g:
   e. dilute to 1 liter with DI water
2. Standard pH meter buffers: 4.0 and 7.0

C. Procedure:

1. Weigh 20g air-dry soil into small cup
2. Add 20ml DI H_2O and stir intermittently for 1 hour
3. Read pH (See Electrometric Determination of pH and Titration for Bicarbonate in the Instrument Section for details on using the pH meter.)
4. Adjust pH meter to 8.0 with diluted (20ml H_2O +20ml buffer) solution
5. Add 20ml buffer solution to soil-water
6. Stir every 10 minutes and immediately before measuring pH
7. Measure pH

D. Calculations:

Cmol H+ kg^{-1} = change in buffer pH (8.0) * 0.8

0.8 cmol H+ kg^{-1} soil for every 1.0 unit pH decrease.

Note: For 0.25mM $CaSO_4$ = 0.043g $CaSO_4$ per liter

XII. Exchangeable Acidity in Soils (Modified Mehlich Buffer) Application and Principle

The Mehlich buffer measures primarily exchangeable acidity (H^+ and Al^{+3}) through displacement of acidic cations by Ba^{2+}(or Ca^{+2}) and NH_4^+. Subsequent appearance of H^+ in solution occurs through direct displacement from the CEC or through exchange of Al^{+3} followed by hydrolysis. The underlying premise is that a decline in pH of the buffer is linearly related to exchangeable acidity. Since the pH is buffered at 6.6, some nonexchangeable acidity is assumed measured also.

Safety and Disposal

1. **Wear safety goggles, lab coat and gloves. See Appendix IV, Section 1 – Use of Acids.**
2. **Collect all waste in a container and label Mehlich Buffer Waste.**

A. Equipment:

1. 2-mm sieve
2. Balance for weighing
3. Paper Cups
4. Stir rod
5. pH meter.

B. Reagent:

MehlichBuffer

1. Sodium Glycerophosphate ($Na_2C_3H_5(OH)_2PO_4$•5 ½ H_2O), fw 315.15; CAS# 1555-56-2
2. Triethanolamine ($[HOCH_2CH_2]_3N$), fw 149.14; 1.117-1.125 g/mL density CAS# 102-71-6
3. Glacial acetic acid, (CH_3COOH), 99.5 %, 17.4 N CAS# 64-19-7
4. Ammonium chloride (NH_4Cl), fw = 53.5, CAS# 12125-02-9
5. Barium chloride dihydrate ($BaCl_2$•$2H_2O$), fw = 244.32, CAS# 10326-27-9
6. Aluminum chloride ($AlCl_3$•$6H_2O$), fw = 241.48, CAS# 12125-02-9
7. Hydrochloric acid,HCl, 36 %, 12.1 N,

Function: Used in the verification of the Mehlich buffer as explained below.

Mixturefor2Lofbuffersolution

1. Add about 1500 mL of distilled water to a 2-L volumetric flask. Add 5.0 mL of CH_3COOH; add 9.0 mL of $(HOCH_2CH_2)_3N$ as 18 mL of a 1:1 aqueous solution for ease of delivery; add 86 g NH_4Cl and 40 g of $BaCl_2$•$2H_2O$. Mix these materials until in solution.

2. In a separate container, dissolve 36 g of $Na_2C_3H_5(OH)_2PO_4$•5 ½ H_2O in about 400 mL of distilled water. After dissolution, add this solution to the 2-L flask containing the other ingredients. Allow the solution to cool and then make to final volume with distilled water.

VerificationofpHoffinalMehlichbuffersolution

Calibrate pH meter with standard buffer solutions using standard pH buffers of pH 4.0 and 7.0. Dilute an aliquot of the Mehlich buffer solution with an equal volume of distilled water (10 mL Buffer + 10 mL d. water) and measure pH while stirring. The pH should be 6.60. Adjust for each 0.01 pH unit above 6.60 by adding acetic acid drop-wise until desired pH is obtained. For each 0.01 pH unit below 6.60, add 1:1 aqueous triethanolamine drop-wise until desired pH is obtained.

VerificationMehlichBufferusingStandardAcid–Notusedsinceitisnotincludedinthecalculation

The final concentration of the Mehlich buffer is verified by adding 10 mL of buffer with 10 mL of distilled water with 10 mL of 0.1 N HCl-$AlCl_3$ standard acid. The pH of this mixture should be 4.1 +/- 0.05. The 0.1 N

HCl-$AlCl_3$ standard acid is prepared by mixing 0.05 N HCl with 0.05 N $AlCl_3$•$6H_2O$ which is prepared by dissolving 4.024 g $AlCl_3$•$6H_2O$ in 0.05 N HCl and mixing well.

ModifiedMehlichBuffer

The only change is the substitution of $BaCl_2$ with $CaCl_2$ on a molar basis.

C. Procedure:

1. Weigh 10g of air-dry, screened (2-mm) soil into a paper cup. Add 10 mL distilled water and mix for 5 seconds. Wait 1-hr and read pH after calibrating meter with 4.0 and 7.0 standard buffer solutions. Add 10 mL of Mehlich buffer solution to cup and gently swirl 5 sec. Read pH of soil–buffer mix (BpH) after sitting 30 min.

D. Calculations

1. Calculate exchangeable acidity (AC) by the following formula: (6.6 – BpH) ÷ 0.25 = meq acidity / 100 cm^3 = AC where 6.6 is the pH of the Mehlich buffer alone.

Note: For every 0.1 drop in BpH from 6.6, 0.4 meq AC / 100 cc is measured. Analytical Performance RangeandSensitivity

1. The capacity of the Mehlich buffer ranges from 0 to 10.4 meq AC / 100 cm^3 soil, which is equivalent to 5.1 U.S tons of 90% CCE lime per acre. The sensitivity is 0.4 meq AC / 100 cm^3 soil.
2. Its use appears to be suitable on a wide range of soils of varying texture and organic matter. PrecisionandAccuracy
3. Soil buffer pH can be read to 0.01 pH unit.

E. Effects of Storage

Air-dry soil can be stored indefinitely without affecting Mehlich buffer pH measurement. The Mehlich buffer solution itself if made with $BaCl_2$ has an indefinite storage period. The modified Mehlich buffer solution made with $CaCl_2$ when un-refrigerated has a shelf life of about 1 to 2 weeks due to growth of bacteria or fungi depending on lab temperature and light conditions.

XIII. Total Carbon and Nitrogen

Safety: Wear safety glasses and gloves. See Appendix IV, Section 8 – Use of Ovens.

Procedure:

1. Use mortar and pestle under the hood to grind up one spoonful of each sample.
2. Dry in oven overnight at 50 – 60 C.
3. Work from desiccator when weighing out samples, use 40 – 60 mg of soil per sample.
4. Analyze sample on the Flash EA 1112
5. Include reference standard after calibration and after every tenth sample.

XIV. Total Organic Phosphorous – Ignition Method

Organic phosphorous is determined by the difference between the amounts of extractable phosphorous determined from ignited and unignited H_2SO_4 extractable P.

Safety and Disposal : Wear safety goggles, lab coat and gloves. See Appendix IV, Sections 1, 6 and 7 for use of acids, muffle furnace and ovens respectively. Unused acid can be disposed of down the drain under the hood.

A. Equipment:

1. Crucibles
2. Oven
3. Centrifuge
4. Shaker box

B. Reagent:

0.5M H_2SO_4 - To a 2L volumetric flask containing 1000ml of type II DI, add 28ml of concentrated trace metal H_2SO_4. Mix and allow to come to room temperature. Fill to the mark with DI.

C. Procedure:

P ignited:

1. Weigh 1.0g of soil into a porcelain crucible.
2. Muffle at 550°C for 1 hour.
3. After the crucible has cooled, transfer the contents to a centrifuge tube.

4. Add 25ml of 0.5M H_2SO_4 to the centrifuge tube.
5. Shake for 16 hours.
6. Centrifuge the sample to obtain a clear solution.
7. Transfer to a 50ml vial.

P unignited:

1. Weigh 1.0g of soil into a centrifuge tube.
2. Add 25ml of 0.5M H_2SO_4 to the centrifuge tube.
3. Shake for 16 hours.
4. Centrifuge the sample to obtain a clear solution.
5. Transfer to a 50ml vial.

D. Quality Control: Include 3 blanks and 3 soil reference to each set.

E. Calculations:

Total extractable P = (Pug/mL) x (50/v) x (50/g of soil)

V=sample volume

$P_{organic}=P_{ignited}-P_{unignited}$

Intentionally Left Blank

PROCEDURES FOR ANALYSIS OF SEDIMENT

I. Sediments Protocol

Safety: Wear safety glasses. See Appendix IV, Section 8 – Use of Ovens. Sieve under the exhaust located in the back of the lab.

A. Collection

Sediment samples are collected from Watersheds 2 and 7 when the ponding basins are cleaned out, approximately once a year. Each sample should receive the following treatment:

1. Dry each sample to constant weight at 50°C. Record dry weight.
2. Separate samples by sieving through standard soil mesh sieves, resulting in 3 size fractions: < 1 mm, 1-2 mm, and > 2 mm. Weigh each fraction and record.
3. Save the > 2 mm fraction for carbon determination. Toss out rocks and other minerals; weigh what remains after oven drying again at 50°C. Grind. **See JHA on use of Wiley Mill.**
4. Watershed 2: Combine the < 1 mm and 1-2 mm fractions. Mix well. Remove 5 subsamples approximately 30 g each. Three to four samples are taken from each ponding basin.
5. Watershed 7: Samples are collected along 6 sample lines, which are numbered either 1-6 or A-F. Combine all samples from a given line (< lmm and 1-2 mm), thus making 6 composite samples. Remove duplicate subsamples from each composite, resulting in 12 samples for chemical and mechanical analysis, need about 300 g.
6. Analyze for total cations (Ca, Mg, Na, K, and P), exchangeable cations (Ca, Mg, Na, K, and P), mechanical analysis, CHN composited samples and for > 2 mm fraction.

B. Separation of Organic Material from > 2mm Sediment Fraction

Equipment:
1. Deionized water
2. Small white enamel pans
3. Forceps
4. Large beaker covered with plastic screen
5. Aluminum weighing pans or #2 paper bag

Procedure:
1. Pour > 2mm sample into enamel pan.
2. With forceps, pick out larger leaf fragments and other organic material.
3. Add water to pan, slosh around till small organic fragments float to surface.
4. Stir with forceps so small pieces of quartz and dirt sink.
5. Pour off into screened beaker.
6. With forceps, remove organic matter to numbered pan or bag.
7. Dry and weigh organic and inorganic fractions.
8. Save organic fraction CHN analysis.

C. Mechanical Analysis for Coweeta Sediments (mostly sand)

Materials:
1. Hamilton Beach mixer and dispersion cups.
2. Bouyoucos hydrometer graduated in grams per liter of water.
3. Soil sedimentation cylinders, 1,205 ml.
4. Thermometer, graduated in °F.
5. Plastic 250 ml beakers.
6. Wash bottles.
7. Stop watch.
8. Sodium hexametaphosphate solution, 10 g/l deionized water.

Procedure:
1. Dispersion
   a. Weigh to the nearest 0.1 g, 100 g air dried soil into 250 ml beaker.

b. Add 40 ml sodium hexametaphosphate solution, and then 150 ml distilled water. Let stand for at least 18 hours, but do not permit to dry out.
c. Use distilled water to wash soil into dispersion cup, then add water to within 2 inches of the rim. Disperse the sample with Hamilton Beach stirrer for 8 minutes.

2. Hydrometer Measurements
a. Wash contents of dispersion cup into soil sediment cylinder. Place hydrometer in cylinder and then add distilled water to upper mark, 1,250 ml
b. Remove hydrometer from cylinder.
c. Blank: add 40 ml sodium hexametaphosphate solution to an empty soil cylinder and dilute to upper mark with distilled water. Take hydrometer readings as for samples.
d. Use rubber ball to close top of cylinder and invert cylinder at least 10 times. Allow time after each inversion for sand to fall from bottom of cylinder but not so much that it begins to accumulate at opposite end. When suspension is uniform, place cylinder on bench and note exact time to the second. This is time zero.
e. Insert hydrometer quickly but carefully, steadying it with finger tip at first. Record hydrometer reading (top of meniscus) exactly 40 seconds after time
f. Move hydrometer up and down in the suspension to displace soil particles which have settled on it and then remove it from cylinder. Re-suspend soil and obtain second reading. If it agrees within 1.0 of scale unit, proceed to next determination; otherwise, repeat the reading. Then take temperature.
g. After two satisfactory 40-second readings have been made, re-suspend the soil and let sit for 3 hours, + or - 15 minutes; take one reading then and record, along with temperature.

D. Calculations
a. Since hydrometer was calibrated at 68°F, data obtained at other temperatures must be corrected. Less error is introduced if the temperature is above 68°F than below. Avoid extreme temperatures. For degrees above 68°F: add 0.2 units per degree above 68°F to hydrometer reading. For degrees below 68°F: subtract 0.2 units per degree below 68°F from hydrometer reading.

b. For the following calculations, subtract % O.M. from weight of soil:

c. 40-second hydrometer reading:

$$\frac{\text{Hydrometer reading (sample-blank) + temp. correction}}{\text{weight of soil, grams}} = \text{\% clay + silt}$$

d. 100 - (%clay + silt) = %sand

e. 3-hour reading:

$$\frac{\text{Hydrometer reading (sample-blank) + temp. correction}}{\text{weight of soil, grams}} = \text{\% clay}$$

f. Determination of silt:
100 - % sand - % clay = % silt

II. Digestion for Total Cations in Sediments

Safety: Wear safety goggles, lab coat and gloves. See appendix IV, Section 1 – Use of Acids, Section 3 – Use of Oxidizers and Section 6 – Use of the Muffle Furnace.

A. Equipment:
1. Flume Hood
2. Hot Plate
3. 600 ml Glass Beakers
4. Watch Glass Covers 11cm
5. Muffle Furnace
6. Porcelain Crucibles
7. Whatman #42 filters

B. Reagents:

1. Hydrogen Peroxide 30%
2. Acid Digestion Solution: To 500 ml DI water slowly add 250 ml of HNO_3 and 30 ml of H_2SO_4. Mix well.
3. HNO_3 - 2%

C. QC - Use a certified or in house soil reference. A minimum of 3 blanks and 3 references are used for each digestion set.

D. Procedure:

1. Weigh approximately 1 gm sediment material into tared and pre-muffled crucible, record exact weight.
2. Muffle at 500°C for 4 hours.
3. Transfer each sample to an acid-washed 600 ml beaker. (Rinse crucible with DI water if necessary).
4. Add enough H_2O_2 to cover sample (approx. 10 ml) and cover with watch glass. Place on hot plate on high temperature and allow to react. **Wear face shield**. When reaction stops fuming, remove watch glass and evaporate to dryness. (At this stage lid can explode if left on).
5. Add acid mixture to cover sample and allow to react as above. Evaporate to dryness.
6. Sample at this point should be a yellow-white sediment. Start blanks here.
7. Add 20 ml 2% HNO_3 to each sample. Wash down beaker sides with warm deionized water.
8. Filter through Whatman # 42 Ashless filter paper into 50 ml volumetric. Bring to volume with DI water.
9. Store samples in acid-washed plastic bottles in refrigerator at 4°C.

Analysis:

18. Analyze for K, Na, Ca, and Mg on atomic absorption and PO_4 on Autoanalyzer or analyze all on the ICP.

PROCEDURES FOR ANALYSIS OF PLANT TISSUE

I. Preparation of Plant Tissue for Chemical Analysis

Safety: See Appendix IV, Section 8 – Use of Ovens. See JHA on use of Wiley Mill.

Plant tissue samples should be dried in the forced air ovens at 65° C. Dried material is ground in the Wiley mill to pass through a 1mm sieve. Subsamples are collected and stored in 20 ml glass scintillation vials.

II. Digestion for Total Cations in Plant Tissue

Safety: Wear goggles, lab coat and gloves. See appendix IV, Section 1 – Use of Acids. See Appendix IV , Section 6 - Use of the Muffle Furnace.

A. Equipment:
1. Muffle Furnace
2. Porcelain Crucibles, acid washed in 5%HNO_3
3. 50 ml graduated tubes
4. Guth Wash Flask
5. NIST Peach Leaves or suitable reference standard

B. Reagents:
HNO_3 20%-To 600 ml of type II deionized water add 200 ml of trace metal HNO_3, allow to come to room temperature. Bring to the mark with DI.

C. Procedure:
1. Dry the samples for 2 hours at 60°C.
2. For ash free dry weight, muffle crucibles prior to use (OR DRY IN OVEN AT 105 FOR 2 HOURS). Allow cooling in oven and store in desiccator. Record the weight for each crucible.
3. Weigh approximately 0.5g sample into a tarred crucible. Record the weight to the nearest mg. Include 3 reference standards.
4. Muffle 3 extra crucibles and carry them through the procedure for blanks.
5. Muffle at 500°C for at least 4 hours. Wood material will take longer to ash. Material that has been completely ashed will not have any black material present.
6. Allow cooling in oven. For ash free dry weight; store in desiccator and record weight of crucible and ash.
7. Working under a hood, dissolve the ash in 5 ml of 20% HNO_3. The ash may not dissolve completely.
8. Use a Guth Wash Flask filled with hot deionized water to rinse the crucible contents into a 50ml graduated tube that has been acid washed in 5%HNO_3.
9. Fill tubes to the 50ml mark with DI water.

D. Quality Control: Include 3 blanks and 3 reference standard.

E. Analysis: Analyze for K, Na, Ca, Mg, P and Al (if needed) on ICP.

F. Calculations:

$$\text{Percent cation} = \frac{50\text{ml} \times \text{conc.mg/linsolution}}{\text{wt. sample g} \times 10000}$$

III. Ash Free Weight

Safety: Wear safety glasses, lab coat and gloves. See Appendix IV, Section 8 – Use of Ovens. See Appendix IV , Section 6 - Use of the Muffle Furnace.

A. Equipment:

1. Muffle Furnace
2. Porcelain Crucibles
3. NIST Peach Leaves or suitable reference standard

B. Procedure:

1. Dry the samples for 2 hours at 60°C. Keep in a desiccator until ready to use.
2. Dry the crucibles for 2 hours at 105°C. Keep in a desiccator until ready to use. Record the weight of the crucible.
3. Weigh approximately 0.5g sample into a tarred crucible. Record the weight to the nearest mg. Include 3 reference standards.
4. Muffle 3 extra crucibles and carry them through the procedure for blanks.
5. Muffle at 500°C for 6 hours. Material that has been completely ashed will not have any black material present.
6. Allow cooling in oven. Store in a desiccator and record the weight of crucible and ash.

C. Calculations

$$\% \text{ ash free weight} = \frac{(\text{wt. g of crucible + sample}) - (\text{wt. g of crucible + ashed sample})}{\text{wt. g of crucible + sample}} \times 100$$

IV. Total Carbon and Nitrogen

Safety: See Appendix IV, Section 8 – Use of Ovens.

1. Dry in oven overnight, temp 50 – 60 C. Dry in original container if glass, otherwise pour into a tin pan.
2. Work from desiccator when weighing out samples, 13 – 17 mg of plant per sample.
3. Analyze sample on the Flash EA 1112
4. Include reference standard after calibration and after every tenth sample.

See Section 1, Instrumental Methods- Combustion Analysis of Total Carbon, and Nitrogen for Soil and Plant Tissue for more information.

V. Determination of Non-structural Carbohydrates (NSC) from Tree Tissue[1]

Safety: Wear safety glasses, lab coat and gloves. See Appendix IV, Section 8 – Use of Ovens. Unused extractant must be placed in the designated container for waste disposal.

As soon as possible after field collection:

1. Place samples of tissue (needles, stem, or roots) in the oven for one hour at 100°C (can freeze until the samples can be placed in the oven).
2. Reduce temperature to 60°C and dry samples to a constant weight (3 days).

When samples are completely dry/ reach a constant weight:

1. Grind dry samples to pass through a 0.5 mm screen (Wiley mill in the shop).

[1] Ward, E. and J.D. Deans. 1993. A Simple Method for the Routine Extraction and Quantification of Non-Structural Sugars in Tree Tissues. Forestry 66(2):171-180.

2. Label samples and store in a glass scintillation vial with screw cap in the dark at room temperature.

Materials needed:

1. Glass scintilation vial with screw cap (2 per sample)
2. 125 mL erlyenmyer flasks (36)
3. 50 mL graduated centrifuge tubes (18)
4. Boiling chips
5. Small tins for measuring moisture content
6. Whatman No. 1 filters (18)
7. Aluminum foil
8. Scale sensitive with readability to 4 decimal places
9. Orbital incubator

Chemical list

Chemical	Quantity used per sample	Order number	Supplier
Amyloglucosidase stock (solid or solution form). Pure extracts from Aspergillus niger are recommended. Typical enzyme activity is 30- 70 units per mg.	1 to 2 units	A7420-5MG	Sigma Aldrich
Anhydrous sodium acetate	0.0656 g	S8750-500G	Sigma Aldrich
Glacial acetic acid	0.072 g or 0.0688 mL		
Thymol	0.5 mg	T0501-100G	Sigma Aldrich
p-Hydroxybenzoic acid hydrazide	0.012 g	H9882-25g	Sigma Aldrich (≥97%)
Hydrochloric acid	0.24 mlL		
Sodium hydroxide	4.17 mL		
Ultrawet 60L 0.1%			
Citric acid		C1909-500G	Sigma Aldrich
Calcium Chloride dihydrate		C3881-500G	Sigma Aldrich
Glucose	0.5 g / day	G7021-100G	Sigma Aldrich

Solutions that can be stored:

Acetate buffer solution

1. Dissolve 6.56 g anhydrous sodium acetate in 500 mL of water
2. Add 7.2 g (6.88 mL) glacial acetic acid and bring up to 1 L with DI water.
3. Add a small amount of thymol (< 50 mg) after bringing solution to 1L. This acts as a preservative. Make sure solution is pH 4.45.
4. Store in a brown poly bottle in the refrigerator.

Solutions to make fresh daily:

Amyloglucosidase enzyme working solution

- Using DI, dilute stock to the required enzyme activity level (one to two units per mL of working solution). Make at least 120 mL fresh daily.

Glucose 'standard' solution

- Dissolve 0.5 g glucose in 1000 mL DI.

Laboratory extraction procedures:

Note: Each incubator holds 16 samples plus1 blank and 1 reference

Safety: The hot plate is used under the hood.

1. Thoroughly mix the sample to ensure uniformity. Measure 100 mg of tissue into an Erlenmeyer flask labeled ID_A. Repeat into 2nd flask labeled ID_B.
2. Weigh a small sample, record weight, and place in a 100°C oven to determine moisture content at the time of analysis.
3. Add 15 mL of DI and a few boiling chips to the first flask. Boil this mixture for two minutes and cool. After the solution is cooled, add 10 mL of acetate buffer and 10 mL fresh amyloglucosidase.
4. Add 35 mL of DI to the second flask. Cover the openings of both flasks with foil.
5. Repeat these steps for each sample. Include blanks and standards with the run.
6. Transfer all flasks to an orbital incubator set at 55°C. Incubate while shaking at 120rpm for 48 hours.

After incubation period (two days):

7. Filter samples through Whatman No. 1 filter paper into 50ml graduated centrifuge tubes. Adjust the volume to 50 mL using DI. Analyze on the autoanalyzer.

For Quality Control:

Add one blank and one reference to each incubator set (every 16 samples).

QC results:

Below is the average results obtained using the different references:

Avg QC results	% Sugar (as glucose)	% starch (as glucose) *	Std Dev sugar/starch
NIST Wheat Biomass Feedstock	3.36	.384	1.26/.120
NREL reference	15.10	4.63	1.09/1.20
Spiked biomass	3.36	17.66	.554/2.20

* Obtained by the difference in the enzyme extraction and the water extraction.

Method Detection Limit for glucose (noted as mg/L glucose) = 1.43

Autoanalyzer set up:

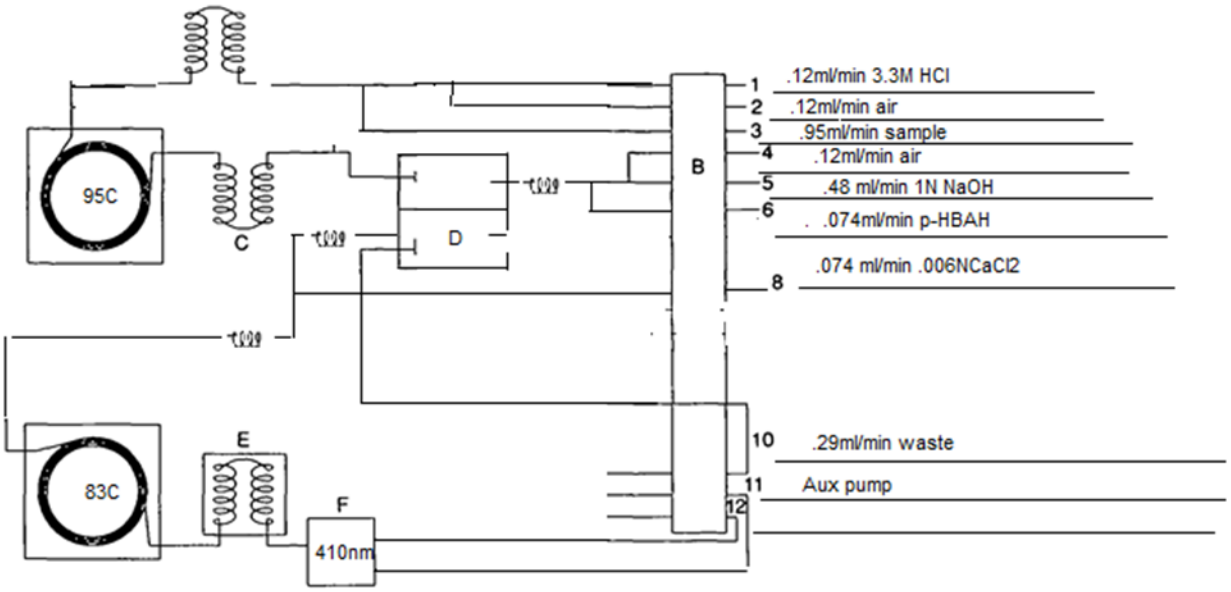

Safety: When making up any of the solutions below wear a lab coat, gloves and safety goggles. The 3.3M HCl solution is made up under the hood.

***p*-HBAH working solution** *(Make up this solution two hours before needed)*

- Add 6 g of *p*-Hydroxybenzoic acid hydrazide to a 100ml volumetric flask containing 50ml DI. Add 1.75g citric acid and fill to the mark with DI.
- Filter the solution with a 0.45um membrane filter. The solution can be stored in a brown bottle for 60 days.

.006M CaCl2

- Make a 1M solution of CaCl2 by adding 14.7g CaCl2 to a 100ml volumetric flask containing 50ml DI. Fill to the mark with DI.
- Add 6ml of the above to a 100 ml volumetric flask and fill to the mark with DI.
- Filter the solution with a 0.45um membrane filter.

3.3M hydrochloric acid

- Add 68.5ml concentrated HCl to a 250ml volumetric flask containing 150ml of DI. Caution the solution will be warm.
- Fill to the mark with DI.
- Add a few drops of 30% Brij solution.
- The solution can be stored at room temperature for 60 days.

1N NaOH

- Dissolve 20g NaOH pellets in a 500ml flask containing 300ml DI. Fill to the mark with DI.
- Caution the solution will be hot.
- When the solution is cool filter the solution with a 0.45um membrane filter.
- The solution can be stored at room temperature for a month.

Wash solution for continuous flow analyzer

- Ultrawet 60L 0.1% in DI

REFERENCES

1. Reynolds, B.C., Deal, J.M., "ProceduresForChemicalAnalysisAtTheCoweetaHydrologic Laboratory", 1986, Coweeta Hydrologic Laboratory, Otto, N.C. 28763

2. Walsh, L.M., "InstrumentalMethodsfor AnalysisofSoilsandPlantTissue", 1971, Soil Science Society of America, Madison, Wisconsin 53711

3. Greenberg, A.E., Trussell, R.R., Clesceri, L.S., "StandardMethodsfortheExaminationofWater and Wastewater", 16th Edition, 1985, American Public Health Association

4. "MethodsforChemicalAnalysisofWaterandWastes", 1983, Environmental Monitoring and Support Laboratory, Office of Research and Development, U.S. Environmental Protection Agency, Cincinnati, Ohio, 45268

5. Cronan, C.S., Goldstein, R.A., "ALBIOS:AComparisonofAluminumBiogeochemistryin Forested WatershedsExposedtoAcidicDeposition", 1989, Acidic Precipitation, Volume 1, Case Studies, Springer-Verlag, New York

6. Gibb, Dorothy Margaret. 1988. "AluminumDistributioninaSouthernAppalachianForested Watershed", Athens, GA: University of Georgia. 186p. Ph.D. dissertation.

INSTRUMENTAL METHODS

This section will deal with analytical methods for analysis of Anions, Cations, pH, Carbon, and Nitrogen. Coweeta methods are similar to the EPA and Standard Methods. Each instrumental section will be a stand-alone instruction manual for an element, ion, or group of ions.

Method	Section
Combustion Analysis of Total Carbon, Hydrogen, and Nitrogen in Soil and Plant Tissue Samples	1
Micro-membrane Suppressed Ion Chromatography Chloride, Nitrate, Orthophosphate, Bromide, and Sulfate	2
Automated Wet Chemistry Ammonium	3
Automated Wet Chemistry by Cadmium Reduction for Nitrate	4
Automated Wet Chemistry Orthophosphate	5
Automated Wet Chemistry Silicate	6
Electrometric Determination of pH and Titration for Bicarbonate	7
Inductively Coupled Plasma Spectrophotometer Potassium, Sodium, Calcium, Magnesium, Aluminum and Phosphorus	8
Combustion Analysis of Water Samples Dissolved Organic Carbon and Total Nitrogen	9

Combustion Analysis of Total Carbon, and Nitrogen In Soil and Plant Tissue samples

Coweeta Hydrologic Laboratory
3160 Coweeta Lab Road
Otto, N. C. 28763

February 2015

Sponsoring Agency:

U.S. Forest Service
University of Georgia

Chelcy Miniat, Project Leader

Laboratory Manager: Cindi Brown

Chemist:

Cindi Brown

Laboratory Technicians:

Carol Harper
Sheila Gregory

INDEX

Section Number	Subject
01	Scope and Application
02	Summary of Method
03	Definitions
04	Interferences
05	Safety
06	Apparatus and Equipment
07	Reagents and Consumable Materials
08	Quality Control
09	Procedure and Calculations
10	Precision and Bias
11	References

TABLES

1. Suggested Reference Materials for Samples at Coweeta.
2. Acceptable Ranges for Aspartic Calibration Standard.
3. Suggested Weights for Various Sample Types.
4. History of Method Detection Limits.

FIGURES

1. System diagram for Flash EA 1112 Analyzer.
2. Filling Diagram for NC Soils

1. SCOPEANDAPPLICATION

1.1 This method is applicable to the determination of Total Carbon, and Nitrogen in soil and plant tissue samples. Water samples can be analyzed by filtration and combustion of filter.

1.2 Method detection limits are summarized in Table 5.

2. SUMMARYOFMETHOD

2.1 The Flash EA series 1112 NC Elemental Analyzer is based on the Dynamic Flash Combustion technique. Samples are converted to simple gases (CO_2, H_2O, and N_2) by combustion in a pure oxygen environment. The gases are separated chromatographically and eluded to a Thermal Conductivity Detector for quantification. Prior to analysis, sieved or ground samples are weighed into tin capsules on a micro balance. The sample weights are entered and analytical results are reported in elemental percent.

3. DEFINITIONS

3.1 Dynamic Flash Combustion Technique - The sample enters the reactor, inserted in the special furnace heated at 900 – 1000°C, a pulse of pure oxygen is added to the system containing a catalyst, the temperature goes up and combustion occurs, converting the sample into elemental (simple) gases.

3.2 Gas Chromatography -- A separation technique based on molecules having a distinct affinity for a particular material.

4. INTERFERENCES

4.1 Use only ultra-high purity Helium and Oxygen gases.
4.2 Heterogeneous materials can cause poor reproducibility.

5. SAFETY

5.1 When preparing reactor tubes, wear safety glasses, gloves, and a lab coat. Work under the hood to prevent inhalation of dust from reagents.
5.2 Do not touch furnace surface when in use. The furnace is at a very high temperature.
5.3 Do not remove a hot reactor tube, wait until it is cool.
5.4 Make sure to use proper gas regulators on the helium, air and oxygen tanks.

6. APPARATUSANDEQUIPMENT

6.1 Flash EA series 1112 CN Analyzer
6.2 Analytical balance – Denver Instruments PI-225D

7. REAGENTSANDCONSUMABLEMATERIALS

7.1 Purchase from CE Elantech, Inc.:

Tin Capsules 9x5mm(set of 250)	240-064-25
Tin Capsules 10x12mm(set of 100)	252-080-00
Small Adsorption Filter W/O Fast Connectors	281-131-04
Flash Fast Connectors(set)	190-502-08
Seal for Adsorption Traps SM/Med W/FC(set)	290-036-35
Copper Oxide(flask of 100G)	338-217-15
High Quality Copper for Flash EA 1112(50G)	338-353-12
Oxidation Catalyst (40G)	338-400-00
Soil NC REF Material (5G)	338-400-25

8. QUALITYCONTROL

8.1 Use NIST Apple leaves or Peach leaves for a Nitrogen reference standard when running plant tissue.
8.2 Use a certified soil reference standard for Carbon, Hydrogen and Nitrogen when running soil samples.
8.3 Run a reference standard after every tenth sample..
8.4 Check calibration of Flash EA after every 50 samples by running an Acetanilide as an unknown. Refer to table 2 for acceptable values for Carbon, Hydrogen and Nitrogen.

9. SamplePreparation
a. Scoop one spoonful of each sample into a tin. Record sample ID and corresponding tin number.
b. Under the hood, use mortar and pestle to grind all soil in each tin. Use the air hose to clean all equipment between samples.
c. Dry soil in oven for 4 hours at 70°C.

Weighing Samples / Preparing QC's
Only use tools to touch tin cups and weigh samples/standards/QC's
Standards (aspartic acid) and QC's (NSB- plant, Thermo- soil) are in glass dessicator
a. Tare tin before weighing sample.
b. Weigh 50 mg for soil and Thermo reference, 15 mg for plant, and 5 mg for aspartic acid.
c. Weigh a QC every 10-12 samples (i.e. make all 12s a reference: A12, B12, etc.).
d. Seal tin before taking final weight (mg). Record on data sheet and/or in computer.

10. Machine Preparation

Startup
a. Turn on computer.
b. Turn on EA1112, open oxygen, and helium tanks.
c. Open Flash software.

Pre-sample Checks / Maintenance (more maintenance instructions on last page)
a. Change ash receptacle (Left tank 1) and adsorption tube after every full run. Ash receptacle will need to be changes after 80-200 samples depending on the type of sample. Less organic material in the sample will require more frequent changes.
Change the oxidizing column (Left Tank 2) and Reduction/copper column (Right Tank 1) only when a "wet plug" forms. See "Extra Information" at the end of these instructions. Use the maintenance tab in the Flash software as a guide for when to change these larger columns.
b. Go to File, load method, desktop, System Defined Methods, and choose N C system.
c. Go to File, save method as, desktop, Flash EA1112 data, current month, and create a file with today's date. Save method here.
d. Go to sample table, import new sample table, choose the most recent run, change the sample number from 2 to 1, then hit OK.
e. Delete old sample data, then export sample table to the folder you created for your run today.
f. Perform a leak test (wait no more than 350 seconds). Both the carrier and resistance flow need to be less than 5 to operate. See trouble shooting instructions if flow is greater than 5.
g. Set up standards and QCs. Your table should look something like this:

	Sample ID	Type	Weight	Comment
1	Bypass (aspartic acid)	Bypass		To check for good peaks
2	MAS200R bypass	empty		To check for a good baseline
3	Blank (empty tin cup)	blank		
4	Aspartic Acid Standard	Standard	~5 mg	
5	Aspartic Acid Standard	Standard	~5 mg	
6	Aspartic Acid Standard	Standard	~5 mg	
7	Aspartic Acid Standard	Standard	~5 mg	
8	Aspartic Acid Standard	Standard	~5 mg	
9	QC (Thermo Soil Ref or Peach)	Unknown	~50/15 mg	
10	QC (Thermo Soil Ref or Peach)	Unknown	~50/15 mg	
11	QC (Thermo Soil Ref or Peach)	Unknown	~50 /15mg	
Leave a blank line and the machine will pause				

Load samples in 1-11 while the detector is recovering from the leak test.
Note about loading: start with "0" over the empty hole and load 1-8 in their corresponding spots. Place the sample loader on the machine, and then manually turn the loader so that "1" is over the open hole and the bypass sample falls in.

h. Check that the machine is up to temperature and that you have a green light. The detector **MUST** be steady at 1000 (±5); it can be jumpy after a leak test. You can auto set it to 1000, but watch it for a few minutes to see if it gradually goes down. This is your baseline so it's important that it stays steady.
Note: the detector may take an hour or so to stabilize. Use this time to weigh out more samples, enter your sample IDs into the Flash software spreadsheet, etc.
i. After blank, standards, and QCs have run, view the calibration curve and check for outliers. If there is a bad standard, un-check/un-highlight it so it will not be used in the calculation. For bad calibrations, see "Extra Information" at the end of these instructions.
j. Click on the green arrow to run samples, view sample being run, and previous sample results. Note: 31 samples take approximately 3 hours and 15 minutes.
k. At the end of the sequence, run an extra QC and an aspartic (both as unknowns) to ensure the machine is still calibrated.
l. Export the completed summary table to the folder you created for today's run.

11. Extra Information

After performing any maintenance/replacing any columns, open software and go to: Maintenance Program, Edit, Reset Maintenance (choose correct column)

Maintenance

1. Left Tank 1 (Ash receptacle):

a. Go to Edit EA parameters, Flow/Timing. Uncheck all gas flows, hit send, hit OK, and wait two minutes. (Or do this before you turn on the instrument and the gas flows in the morning).
Now it is ok to remove the auto sampler. Can go to Tools/empty ash receptacle and follow instructions.
b. Prepare backup ash receptacle by dumping ash and quartz wool in trash (it usually requires a few whacks against the trash can to dislodge all the used samples). When replacing the quartz wool, try not to pack it too tightly as this could slow air flow.
c. **AFTER THE REACTOR IS COOL** - Unscrew the auto sampler and carefully use the special u-shaped, winged tongs to remove the receptacle (**THE ASH RECEPTICLE MAY STILL BE WARM**). Place this somewhere safe to cool.
d. Drop clean ash receptacle into column, wipe any ash off of the O-ring, and screw the auto sampler back on. Turn gas flow back on using the program controls. Reset maintenance and perform leak test. Be sure no dust or particulate is on the o-ring as this can be a source for failed leak test.

2. Left Tank 2 (Oxidizing column/combustion tube):

a. Machine needs to be totally cooled to replace this column.
b. Go to Edit EA parameters, Flow/Timing. Uncheck all gas flows, hit send, hit OK, and wait two minutes. (Or do this before you turn on the instrument and the gas flows in the morning).
Now it is ok to remove the auto sampler.
c. Unscrew the auto sampler and carefully use the special u-shaped, winged tongs to remove the receptacle.
d. Remove the O-ring and grey column using gloves. Inspect the O-ring for cracks or dirt and clean with a Kim wipe if necessary. The easiest way to remove the column is by twisting and pulling up.
e. Scrape out waste into trash can using the long, thin metal rod. Keep scraping until it's all out!
USE HOOD AND PROPER SAFETY PROCAUTIONS FOR THIS STEP. Follow the markings on the metal rod to determine how to fill the column. Use 50mm glass wool, 130mm oxidation

catalyst (use beaker to thoroughly mix), then 10mm glass wool. Do not pack wool too tight that it will restrict air flow.

f. Replace column (will require a twist and a push), O-ring, and auto sampler. Turn gas flow back on using the program controls. Reset maintenance and perform leak test.

3. Right Tank 1 (Reduction column/ copper tube):

a. Machine needs to be totally cooled to replace this column.

b. Go to Edit EA parameters, Flow/Timing. Uncheck all gas flows, hit send, hit OK, and wait two minutes. (Or do this before you turn on the instrument and the gas flows in the morning).
Now it is ok to remove the grey metal "top hat" to the right of the auto sampler column.

c. Using gloves, remove (irregularly shaped) O-ring. Being careful, twist and forcefully pull upward to remove the glass column.

d. Scrape out used copper into the trash can. Try not to scrape the rod against the glass too much; twist in the middle of the copper to avoid stressing the glass. Follow markings on the glass as a guide for how to fill this column.

e. Replace column (twist and push at the bottom), O-ring, and "top hat." Turn gas flow back on using the program controls. Reset maintenance and perform leak test.

4. Adsorption Tube

a. This tube is located on the right side of the machine behind a swinging "door." (Red ends)

b. Unscrew red caps being weary of O-rings located inside.

c. USE HOOD AND PROPER SAFETY PROCAUTIONS FOR CLEANING THIS TUBE.

d. Pull out wool, rinse the magnesium into a 250 mL bottle using the green water faucet located in the back of the hood.

e. Dry the glass tube with the air hose.

f. Replace wool in one end, pour magnesium in using funnel (loose packing is good), and replace wool in the other end.

g. Ensure wool is not packed too tightly and that none is hanging out.

h. Replace the column and O-rings. Reset maintenance.

12. Troubleshooting

There is a troubleshooting manual on the computer (Desktop-Flash EA-Troubleshooting)

1. Calibration curve

a. Change any bad standards to "unknown" and recalibrate. Always include the blank when recalibrating. Do not include any blank with significant peaks.

b. Recalculation, Reset calibration factors, OK, OK, Cancel

2. Leak test

a. Check if everything is fastened /tightened.

b. Check if there are dirty or cracked O-rings.

c. Try taking the auto sampler off and on again (make sure it is level and screws in nicely).

d. Check if the columns are pushed down fully (oxidation and reduction columns).

e. Eject the piston and clean (refer to Flash EA 1112 OPM page 302).

f. Cool down machine completely, remove left tank 2 (oxidizing column/combustion tube) and clean out the cups at the bottom. Be sure to check to O-rings too.

g. Call tech support (888-232-4676).

13. PRECISIONANDBIAS

Single operator precision and bias were obtained from the analysis of NIST Pine Needles, NIST Apple Leaves and NIST Peach Leaves. Table 4 summarizes the current data.

14. REFERENCES

http://weather.nmsu.edu/Teaching_Material/SOIL698/flash/New%20WebSite.htm
http://www.ceelantech.com/
Thermo Electron, September 2004 Edition, FlashEA 1112 Operating Manual, Thermo Electron Technical Publications, Milan.

Table 1. Suggested Reference Materials for Samples at Coweeta.

Sample Type	Reference Material
Soil	Certified material such as Thermo soil or Santis soil
Plant -- Foliage	NIST Peach Leaves or NIST Apple Leaves

Table 2. Acceptable Ranges for Aspartic Calibration Standard

Analyte	Range %
Carbon	35.79-36.39 %
Hydrogen	5.00-5.60 %
Nitrogen	10.22-10.82 %

Table 3. Suggested Weights for Various Sample Types.

Sample Type	Weight mg.
Soil -- A horizon	40-60
Soil -- B horizon	40-60
Plant -- Foliage	12-17
Plant -- Other	12-17

Table 4

History of Method Detection Limits for plant tissue

Analyte	Lab Desig-nation	Method	Instru-ment	Instru-ment in Operation	Units of reported values	2016 Peach Leaves	2015 % Plant Tissue =NIST Peach Leaves	2014 % Plant Tissue =NIST Peach Leaves	2013 plant tissue Peach Leaves %	2012 plant tissue Peach Leaves %	2011 plant tissue Peach Leaves %	2010 plant tissue Apple Leaves %	2010 NBS	2007 Peach leaves
carbon	C	dumas method	Thermo Scientific Flash EA 1112 NC analyzer, CE Elantech, Lakewood, NJ	9/15/05	%	0.38	0.54	0.53	1.26	0.73	0.58	0.83	1.46	0.26
nitrogen	N	dumas method		9/15/05	%	0.09	0.06	0.06	0.10	0.08	0.07	0.22	0.07	0.15

History of Method Detection Limits for Soil

Analyte	Lab Desig-nation	Method	Instru-ment	Instru-ment in Operation	Units of reported values	2016 soil Santis	2015 %Soil Std= Santis	2014 %Soil Std= Santis	2013 %Soil Std = Ther mo	2012 %Soil Std = Ther mo	2011 %Soil Std = Ther mo	2010 %Soil Std = Ther mo	2007 Cowee ta 1A soil
carbon	C	dumas method	Thermo Scientific Flash EA 1112 NC analyzer, CE Elantech, Lakewood, NJ	9/15/05	%	0.366	0.43	0.12	0.15	0.11	0.19	0.40	0.11
nitrogen	N	dumas method		9/15/05	%	0.028	0.03	0.01	0.02	0.02	0.01	0.06	0.01

Figure 1. CHN System Diagram

7.1.1Description of Method for NC-Soils configuration[1]:

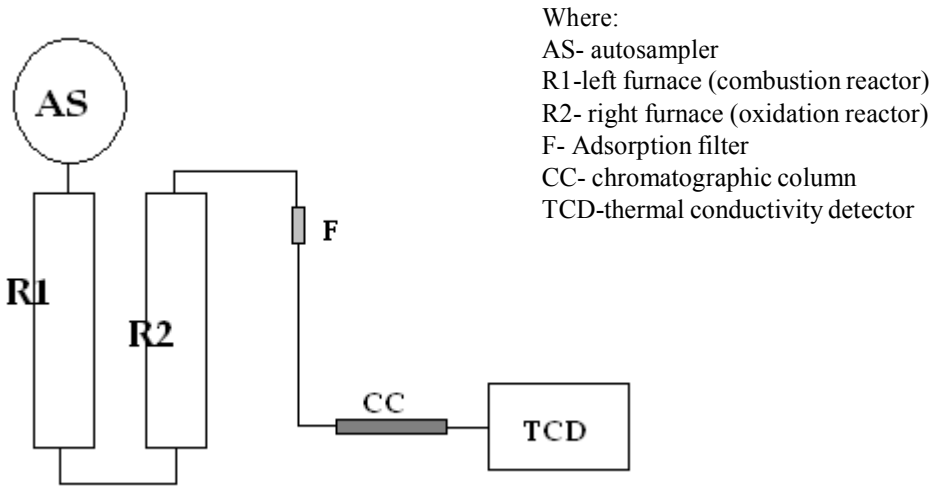

Autosampler AS is connected to the steel combustion reactor R1. Combustion reactor is placed in a furnace at a set temperature of 900°C. The combustion reactor is connected to the oxidation reactor R2 which is set in a furnace at 680°C. The oxidation reactor is in turn connected to the adsorption filter F and the filter outlet is connected to the analytical column CC. The CC is connected to the thermal conductivity detector TCD.

Figure 2 Filling Diagram for NC- Soils

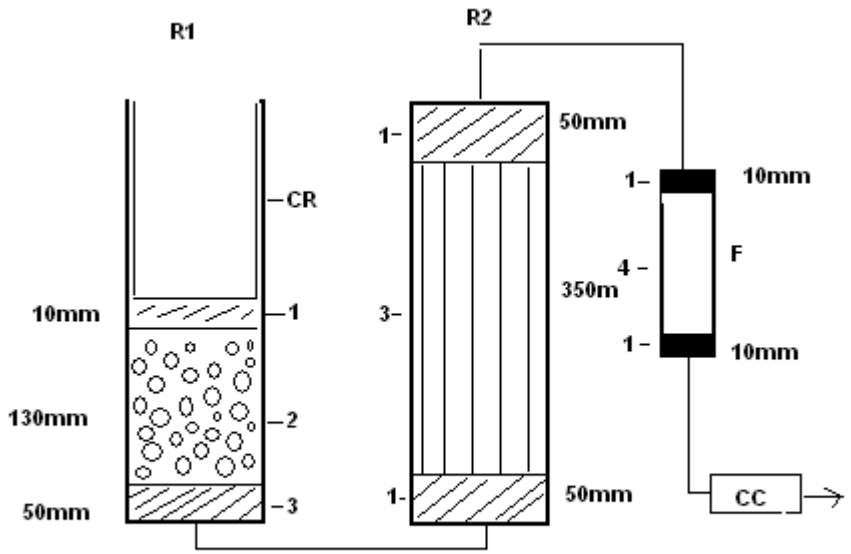

Legend

Reactor R1	Reactor R2	Adsorption filter F
1. Quart Wool	1. Quartz Wool	1. Quartz Wool
2. Oxidation Catalyst	3 Reduced Copper	4. Magnesium Perchlorate
3. Quart Wool		

Note: The R1 reactor requires use of a crucible CR

Micro-membrane Suppressed
Ion Chromatography
for Chloride, Sulfate, Bromide, Nitrate, Flouride, and Orthophosphate

August 08,2017

Coweeta Hydrologic Lab
3160 Coweeta Lab Road
Otto, N.C. 28763

Sponsoring Agency:

U.S. Forest Service
University of Georgia

Chelcy F. Miniat, Project Leader

Laboratory Manager:

Cindi Brown

Chemist:

Cindi Brown

Laboratory Technician:

Carol Harper
Sheila Gregory

INDEX

Section Number	Subject
01	Scope and Application
02	Summary of Method
03	Definitions
04	Interferences
05	Safety
06	Apparatus and Equipment
07	Reagents and Consumable Materials
08	Calibration and Standardization
09	Quality Control
10	Procedure and Calculations
11	Precision and Bias
12	References

TABLES

1. Method Detection Limits.
2. Suggested Calibration Standards

FIGURE

1. Flow Diagram
2. Example chromatogram using AS18 column ,

1. SCOPEANDAPPLICATION

1.1 This method is applicable to the determination of Chloride, Bromide, Nitrate, Orthophosphate, and Sulfate in Stream, Precipitation, Thrufall, and Lysimeter samples.

1.2 Method detection limits are summarized in Table 1.

1.3 This method is not recommended for samples that may contain high concentrations of salts or acids.

2. SUMMARYOFMETHOD

2.1 Ion Chromatography utilizes the separation capacity of an ion exchange column and the detection signal from a conductivity detector. Aliquots of samples are pipetted into sample vials with caps. The automatic sampler loads the sample into the sample loop. The pump controls a micro-injection valve which introduces the sample into a high pressure stream of eluent. As the sample passes through the guard column and the separator column each analyte will be retained to a certain degree by the stationary phase material in the column. After separation the analytes are pushed through the micro-membrane suppressor. The eluent ions are neutralized and the sample ions are converted to their corresponding strong acids. The conductivity detector responds to each ion as it eludes off the column. Peak area data is acquired through computer interface. Calibration curves are constructed from standards with known concentrations of each analyte. Concentrations of the unknown samples are determined based on the calibration curve.

3. DEFINITIONS

3.1 ION EXCHANGE -- a reversible process by which ions are interchanged between an insoluble material (stationary phase) and a liquid (mobile phase) with no substantial structural changes of the material.

3.2 SUPPRESSOR -- a semipermeable membrane containing cation exchange sites to suppress the eluent background conductivity.

3.3 ELUENT -- the ionic liquid mobile phase used to transport the sample through the exchange columns.

3.4 RESOLUTION -- the ability of a column to separate constituents under specified test conditions. Peak resolution is a function of column efficiency, selectivity, and capacity. Separation of peaks can also be a function of eluent strength.

3.5 RETENTION TIME -- the interval measured from the point of sample injection to the point of maximum peak area for a given analyte.

4. INTERFERENCES

4.1 Shifting retention times can cause peaks to be misidentified or unidentified. Retention times will shorten over the life of the column due to contamination of the stationary phase.

4.2 Peaks that elude close together may not be properly integrated if one peak is disproportional to the other peaks.

4.3 Noisy baselines can interfere with peak sensitivity. See section 10.7.

4.4 New samples should be checked for late eluting peaks by running the chromatogram for 22 minutes. Also, check for co-eluding peaks by spiking samples with pure standards.

5. SAFETY

5.1 Most of the reagents used in this method are not hazardous. Follow the Coweeta Lab Safety Manual when using all chemicals.

5.2 The eluent cartridge can be thrown in the garbage after empting the solution remaining in the cartridge (KOH) under the hood. Wear protective gloves, lab coat, and safety glasses when working with caustic chemicals.

5.3 High pressures in excess of 3000PSI are generated by the pump. Column compartment should be shielded and operator should wear safety glasses when working on high pressure lines.

6. APPARATUSANDEQUIPMENT

6.1 ION CHROMATOGRAPH:
The Dionex ICS4000 ion chromatograph is equipped with an Autosampler, High Pressure pump, Conductivity Detector, Charge Detector, Guard Column, Separator Column, Anion Self Regenerating Suppressor, Eluent Degasser, and Computer software that run under Windows operating system. See Figure 2.

6.1.1 AS-AP Autosampler:
Samples are loaded into 1.5ml disposable plastic vials. The sampler can hold a total of 120 samples.

6.1.2 High Pressure Pump:
Steady pressure is the single most important parameter for good chromatography. The pump is a programmable dual head gradient pump capable of delivering pressure up to 3000 psi. The pump receives programming from the computer.

6.1.3 CD Conductivity Detector:
The Conductivity Detector responds to each ion as they elute off the column. Communications with the computer allow for automatic range, zero offset, and conductivity cell on and off.

6.1.4 QD Charge Detector:
Analyte response is proportional to ion charge. Analyte current is measured at a fixed cell voltage and the analyte equivalents are detected. Weakly dissociated analytes show an enhanced response and improved linearity when compared to conductivity detection.

6.1.4 AS18 Capillary Guard Column:
Guard Columns provide protection for the more expensive Separator Column. Samples are filtered before being injected but some very small particulates will get through and collect on the Guard Column. The Guard Column is usually a short version of the longer Separator Column.

6.1.5 AS 18 Capillary Separator Column:
The .40 x 250 mm Dionex AS18 Separator Column has an ion exchange capacity of approximately 2.85 μeq/column. This resin is composed of a highly cross-linked (55%) 9 μm macroporous (2,000 A pore size) polyethylvinylbenzene/divinylbenzene substrate agglomerated with anion exchange latex that has been completely aminated. The latex has a polyvinylbenzyl backbone and carries the actual ion exchange sites which have a nominal efficiency for sulfate using standard operating conditions of at least 20,000 plates/meter. The highly cross-linked (55%) substrate core permits the use of organic solvents in the eluent without loss of bed stability. This column usually operates at a back pressure of 1,800psi at 10ul/min.

6.1.6 Eluent Generator EG
The EG generates high purity base eluent from DI water. The EG has the following components: programmable current supply, disposable eluent generator cartridge, a continuously regenerated trap column (removes extraneous contaminants from the DI) and an EG degas cartridge that removes electrolysis gases from the generated eluent.

6.1.7 Anion Capillary Electronic Suppressor ACES:
Suppression of the eluent or background conductivity allows the detector to see lower concentrations of ions. The Dionex ACES 300 Anion Self Regenerating Suppressor utilizes a semi-permeable membrane in combination with an electrical current to suppress eluent conductance.

6.1.8 Carbonate Removal Device CRD:
The Thermo Scientific™ Dionex™ Carbonate Removal Device (CRD 180, 200 and 300) removes carbon dioxide from the suppressed eluent stream by diffusion through the walls of a carbonate selective gas permeable membrane. With carbonate eluent systems the Dionex CRD 300 reduces the background signal to nearly the same levels as that of hydroxide eluents. Plumbed after the suppressor, the carbon dioxide transfer is aided by a countercurrent flow of basic solution.

6.1.9 Temperature Control Zones
Maintains constant temperature for the column, the chromatography compartment, and the conductivity cell.

6.1.10 Computer Software:
The Dionex ICS4000 system uses a windows based software package, Chromelean 7. The Chromeleon software affords the user flexibility during operation. The operator has control over all modules by setting up a Methods file. Sequence files are set up and run. Data is plotted in real time and results are integrated. Chromatograms are stored on disk and can be reprocessed if need be.

7. REAGENTSANDCONSUMABLEMATERIALS

7.1 Eluent Generator Cartridge
The recommended eluent for running Cl, Br, SO_4, NO_3-N, O-PO_4, on the AS18 column is KOH and must be purchased from Dionex. The cartridge is supplied with a serial number required to operate the system. As the system runs the eluent is depleted until 0% is reported by the system and a new cartridge is required. The cartridge should last 18 months.

7.2 ACES:
The ACES™ 300 converts highly conductive hydroxide-based eluents into pure water, reducing the baseline conductivity. While suppressing the eluent, the ACES 300 also converts the analytes into their more conductive hydronium (acid) form, increasing their sensitivity under conductivity detection

7.3 Sample Vials:
The Autosampler uses Dionex 1.5 mL plastic vials.

8. CALIBRATIONANDSTANDARDIZATION

8.1 Anion Stock Solutions are 1000ppm Ricca© single analyte calibrants.

8.2 Working Standards:
Tare 1000 mL flask on balance and make the following standards on w/w basis.

Chloride: ..25 mg/L, .500 mg/L, 1.00 mg/L, 2.00 mg/L
Bromide : .010mg/L, .050mg/L, .100mg/L, .25mg/L
Nitrate - Nitrogen: .010 mg/L, .050 mg/L, .100 mg/L, 0.500mg/L
Phosphate: .010 mg/L, .050 mg/L, .100 mg/L, .500 mg/L
Sulfate: .50 mg/L, 1.00 mg/L, 2.000 mg/L, 4.000 mg/L

9. QUALITYCONTROL

9.1 Stock solutions are purchased yearly. Two aliquots are set aside in order to check the stock concentration if necessary.

9.2 QC concentrates from NSI are sent to the lab quarterly. They are analyzed for SO_4, Cl, NO_3-N, PO_4 and Br. The certified samples have a tolerance range associated with each value. Samples are run in triplicate.

9.3 A standard curve is determined before every analysis with the Ion Chromatograph. R squared must equal 0.99 or greater before samples are analyzed.

9.4 Daily QC checks are performed using solutions made from Spex IC Instrument Check Standard. Acceptable ranges for each ion are based on 95% confidence limits.

9.5 Check limits of detection quarterly for all instruments.

9.6 QCs are run after every calibration curve, every 10th sample and at the end of the run.

9.7 Calibrants and quality control samples must follow the same shelf life guidelines as a sample.

9.8 When samples are filtered a filter check must be performed by running DI through another filter and analyze as a sample.

9.9 A DI sample is analyzed with each analysis.

9.10 If samples are frozen, 3 DI blanks must be frozen with the samples and analyzed when the samples are analyzed.

10. PROCEDUREANDDATAPROCESSING

10.1 I.C. Startup:

1. Turn on computer. (Machine should be left on all the time). PSI should be approximately 1900, flow set at 0.01 ml/min, suppressor at 10mA.
2. Put fresh DI in front reservoir every 2 weeks. Change DI in back reservoir every three months.
3. Open IC software by clicking on the Chromeleon icon on desktop.
4. To create a sequence, open the last sequence ran under File heading, click Save As, and put in new date.
5. Commonly used sample names such as weekly watersheds can be copied from Sample IDs excel spreadsheet and pasted into the sequence under Name column. Otherwise just type the sample name in under the Name column.
6. Trays can be placed into the green, blue or red slot on machine. Each tray has 40 positions labeled 1-8 across and A-E down. For example, if a sample has BA2 as its position, it must be placed in row A, column 2, in the tray that is in the blue slot.
7. A sequence can be reordered by right clicking in the position column and selecting Fill Down. For example, if you click on GA1 and select fill down, the next position will be GA2, GA3, etc.
8. You can change the instrument method by clicking the instrument method on a sample row, click on the check mark and scroll down to the method you want and click on it. You can use the Fill Down feature to change all the samples to that method.

10.2 Sampler startup:

1. Vials are 1.5ml polypropylene vials with caps. Fill the vials with sample by using a 1 ml pipettor. Rinse first with sample, then pipet sample into the vial, and rinse pipet tip with DI water. Place vial into the correct position on the tray.
2. Start by selecting the start button at the top of the sequence.
3. Samples can be added while the sequence is running. Click at the bottom of the sequence to add a new sample row, continue clicking for the number of samples you want to add, and type in or copy and paste your sample IDS.

10.3 To start the run:

1. Click the start button located on the sequence page in the Chromeleon Console window.

10.3 Calibration:

1. Each chromatogram will take 15 minutes. After the standards have run, look for any abnormalities such as: peak areas not close to what you would expect, peaks not identified correctly, or noisy baseline. If needed refer to trouble shooting guide.
2. Each sequence usually has four to five standards, a low (.05) QC, QC1 and QC2. If a standard looks incorrect, you can rerun it by inserting a sample into the sequence, selecting Calibration standard under the Type heading, clicking the appropriate level, and typing in the tray position of that standard. There is enough sample in the vial for several runs, or new solution can be pipetted into a vial and the old vial replaced with the new one. The standard with incorrect values can be changed to unknown under the Type heading.
3. Calibration curve can be checked by opening a chromatogram (double click on a standard in the sequence), clicking on the calibration tab at the bottom of the screen and checking the coefficient of determination. A visual representation of the curve can be seen by clicking on the calibration and PM icon at the top of the screen, and then clicking on the anion peak in the chromatogram that you wish to view.

10.4 Shutdown:

The computer can be shut down at the end of the week without turning off the machine.

10.5 Data Processing:

1. To export data, highlight the whole sequence, and right click on “export”. Uncheck Pdf, and check Excel. Click the square next to Excel. Under file name formula, put the day’s date, or however you want to name the file. Uncheck everything except Summary, then click OK. Under parent folder, go under libraries, documents, my documents, the year, and the month, click OK.

10.6 Trouble shooting:

1. If peaks are not identified correctly you may need to alter retention times in the component table. Click on the calibration and PM icon, then the component table tab, and next to the anion you wish to change type in the new retention time. **Only experienced operators should modify a file.**
2. If the retention time shifts during a run, and a peak isn’t labeled correctly, you can right click on the peak, select manual peak identification, click on the arrow next to Component and choose the anion. **Only experienced operators should modify a file.**
3. If peaks areas are not integrated correctly you can modify integration parameters. Click on the calibration and PM icon, then the detection tab at the bottom- this will show you the parameters of integration. You can manually type in changes here. Alternatively, you can right click and drag over peaks on a chromatogram, and select Smart peaks. This will show you other integration options to select. **Only experienced operators should modify a file.**
4. You can change the calibration type by clicking Calibration and PM icon, and under Calibration type heading choose linear, linear with offset, etc. **Only experienced operators should modify a file.**
5. If retention times are shifting, you may need to flush the column. You can flush the column by ramping the eluent concentration up to 200mM for 40 minutes to 1 hour, then changing the eluent concentration back to the usual method concentration. Go under Instruments, click on Electrolytics and change the setpoint of the eluent concentration, or you can choose Column Flush by clicking on instrument method in a sequence row, and have this as a sample at the end of the run.
6. If there is mechanical trouble with the instrument, an error message should come up on the small screen on the instrument. If temperature or the suppressor surpasses the setpoint, the value should show up yellow or red, rather than green.

10.7 If the power goes off:

Go to Instruments in the software, click on the tab ICS-4000, click on for the pump, column oven, and compartment. Then click on tab Electrolytics, and click on for eluent generator, CR-TC, CES. Then under tab ICS- 4000-CD click cell heater on. When conductivity background is < 2, you can turn the charge detector on. (You can alternatively turn these on by using the screen on the instrument, if the computer isn’t on.) Under Instruments and then Sampler tab, prime syringe for 10 cycles. Let the instrument stabilize for 1-2 hours.

11. PRECISIONANDBIAS

11.1 Single operator precision and bias were obtained from the analysis of quality control check samples. QC samples were obtained from Environmental Resource Associates and were diluted according to manufacturer’s directions.

12. REFERENCES

12.1 Dionex Reference Library, P/N 053891-35, 2009, Dionex Corporation, 1228 Titan Way, Sunnyvale, California 94088-3603

Table 1. Method Detection Limits

Analyte	Lab Designation	Method	Instrument	Instrument in Operation	Units of reported values	2016 mdl matrix= DI	2015 mdl matrix= DI	2014 mdl matrix= DI			
Chloride	Cl	Micro-membrane Suppressed Ion Chromatography , using a capillary AS 18 column	Thermo Scientific ICS 4000 capillary Ion Chromatograph, from Dionex, Sunnyvale, CA	June 2014	mg/L	0.006	0.006	0.004			
Bromide	Br			June 2014	mg/L	0.001	0.002	0.003			
Nitrate-Nitrogen	NO3-N			June 2014	mg/L	0.001	0.001	0.002			
ortho Phosphate	o-PO4			June 2014	mg/L	0.002	0.004	0.004			
Sulfate	SO4			June 2014	mg/L	0.003	0.002	0.005			
Fluoride	F			June 2014	mg/L	0.003					
Analyte	Lab Designation	Method	Instrument	Instrument in Operation	Units of reported values	2014 mdl matrix= DI	2013 mdl matrix= DI	2012 mdl matrix= DI	2011 mdl matrix= DI	2010 mdl matrix= DI	2007 mdl matrix= DI
Chloride	Cl	Micro-membrane Suppressed Ion Chromatography , using an AS 18 column	Dionex 2500 Ion Chromatograph, from Dionex, Sunnyvale, CA	Sept 2004	mg/L	0.004	0.011	0.065	0.001	0.001	0.009
Bromide	Br			Sept 2004	mg/L	0.003	0.003	0.002	0.002	0.001	0.005
Nitrate-Nitrogen	NO3-N			Sept 2004	mg/L	0.002	0.005	0.001	0.003	0.000	0.001
ortho Phosphate	o-PO4			Sept 2004	mg/L	0.004	0.008	0.004	0.002	0.003	0.009
Sulfate	SO4			Sept 2004	mg/L	0.005	0.006	0.003	0.001	0.001	0.002

student t with nine degrees of freedom and a 99% confidence level = 2.821

Figure 1 – Flow Diagram for ICS4000

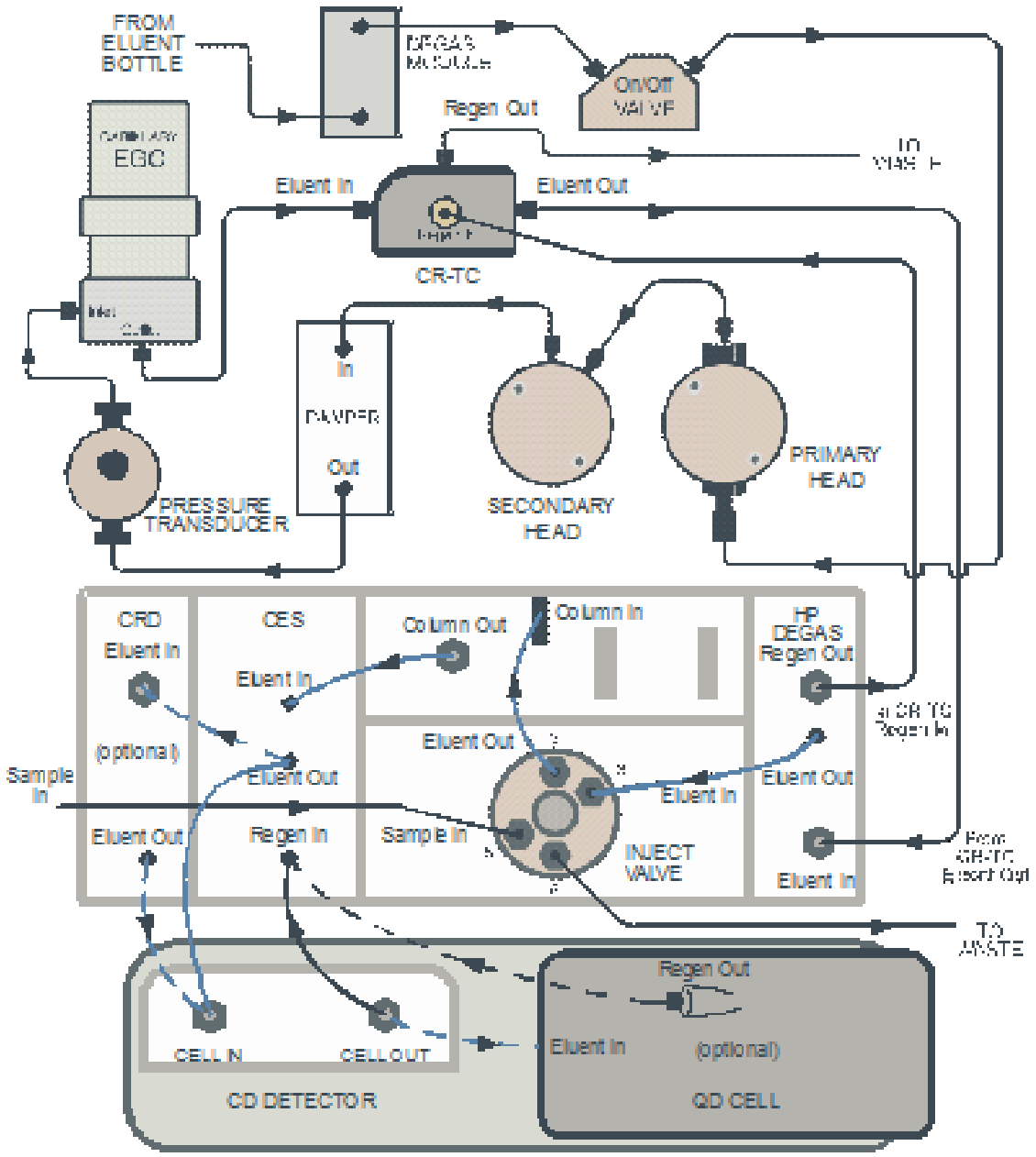

Deionized water from the reservoir flows first through the eluent degas assembly and then through the eluent valve to the pump. The water is then pushed through a pulse damper, which smooth's minor pressure variations from the pump to minimize baseline noise. From there, the water flows through the pressure transducer, which measures the system pressure.

62

Table 2. Suggested Calibration Standards for Streamflow, Precipitation, Thrufall, and Lysimeter Samples at Coweeta

Analyte	Calibration Standards mg/L
Chloride	0.25, 0.50, 1.00, 2.00
Bromide	0.01, 0.05, 0.10, 0.25
Nitrate	0.01, 0.05, 0.10, 0.50
Orthophosphate	0.01, 0.05, 0.10, 0.50
Sulfate	0.50, 1.00, 2.00, 4.00
Fluoride	0.01, 0.05, 0.10, 0.25

Figure 2. Chromatogram containing Chloride, Sulfate, Bromide, Nitrate, Orthophosphate

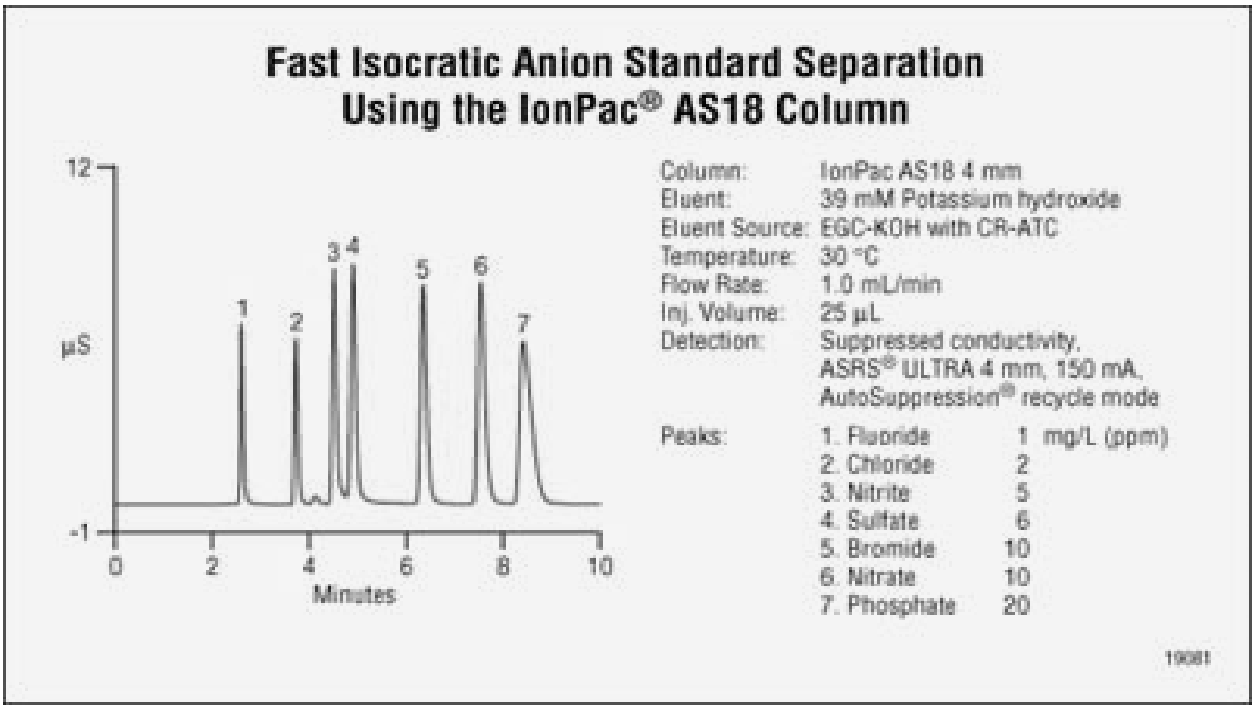

Automated Wet Chemistry
for Ammonium

February 2015

Coweeta Hydrologic Lab
3160 Coweeta Lab Road
Otto, N.C. 28763

Sponsoring Agency:

U.S. Forest Service
University of Georgia

Chelcy F. Miniat, Project Leader

Laboratory Manager:

Cindi Brown

Chemist:

Cindi Brown

Laboratory Technician:

Carol Harper
Sheila Gregory

INDEX

Astoria

Section Number	Subject
01	Scope and Application
02	Summary of Method
03	Definitions
04	Interferences
05	Safety
06	Apparatus and Equipment
07	Reagents and Consumable Materials
08	Calibration and Standardization
09	Quality Control
10	Procedure and Calculations
11	Precision and Bias
12	References

TABLES

1. Method Detection Limits.
2. Recommended Sample Tray/Table Layout
3. Example of Sampler Set up Window
4. Example of Channel Properties – Calibration Window.

FIGURES

1. System diagram for Astoria.
2. Manifold setup for Ammonium.

Astoria

1. SCOPEANDAPPLICATION

1.1 This method is applicable to the determination of Ammonium in Stream, Precipitation, Thrufall, Lysimeter, and in extracted soil samples.
1.2 Method detection limits are summarized in Table 1.
1.3 This method is not recommended for samples that are highly colored.

2. SUMMARYOFMETHOD

2.1 Samples are drawn from the automated sampler into a stream of reagents. Air bubbles are introduced to keep each sample discreet. Ammonium reacts with alkaline phenol and hypochlorite to form indophenol blue. Sodium Nitroprusside is added to intensify the blue color. The reaction is speeded up by running the solution through a heating bath coil at 50^0 C. After the reaction has developed a color the solution goes to the detector. The detector is a spectrometer that utilizes a flow cell to measure changes in transmitted light intensity. Beer's law correlates transmitted light intensity to the concentration of ions in the sample.

log (1/T) = abc
where: T = transmittance
a = absorptivity
b = length of light path
c = concentration of ion (mg/L)

Calibration curves are constructed from a series of known standard concentrations. The concentrations of the samples are calculated based on the calibration curve.

3. DEFINITIONS

3.1 Absorbance -- The measurement of the absorption of a particular wavelength of light as it passes through a liquid.

3.2 Colorimetry -- the measurement of light transmitted by a colored complex as a function of concentration.

3.3 Monochromator -- a detector which measures absorbance of light at specific wavelengths using a diffraction grating to select a specific wavelength of light.

3.4 Peristaltic Pump -- a pumping system which moves liquids by compressing flexible tubing between a solid surface (platen) and a roller.

3.5 Segmented Flow Analysis (SFA) -- a technique where the samples are separated by bubbles of a gas. The bubbles also help mix the reagents as they move through the manifold coils.

3.6 Transmittance -- The ratio of the radiant power transmitted by a sample to the radiant power incident on the sample

4. INTERFERENCES

4.1 Highly colored samples that absorb in the wavelength range of 620 - 640 nm can cause false positive readings. Samples at Coweeta are usually clear so this is no problem.

4.2 Avoid using Ammonia based cleaning products in the lab.

5. SAFETY

5.1 Extra precaution should be used when handling the liquid Phenol. Wear lab coat, gloves, and eye protection when using Phenol. Always work under a hood when making up the reagent, vapors can also be harmful.

5.2 Wear lab coat, gloves, and eye protection when using Sodium Hypochlorite. See appendix IV, Section 3 – Use of Oxidizers.

5.3 Wear lab coat, gloves, and eye protection when using Sodium Nitroferricyanide.

5.4 Turn on the exhaust vent over the Astoria system. Wear lab coat, gloves, and eye protection when working around the manifold, tubes could become clogged and pressure may increase enough to cause a tube to pop loose.

5.5 Read the lab safety plan and ask the lab safety officer if you have any questions.

6. ApparatusandEquipment

6.1 Base Module:
The Astoria 2 Analyzer base module incorporates the Micropump, Cartridge Base, and Detector into one compact unit. The unit also contains digital heating bath controls and power supply.

6.2 Autosampler:
The Astoria 311 XYZ sampler module, with traveling washpot, holds up to three 60 position sample racks and a 20 position calibrants rack. Sample and wash times, automatic shut off and sampling mode are all microprocessor controlled from the FASPac software package.

6.3 Auxilary Pump:
The 322 Auxilary Pump provides an external supply of solution to the 311 sampler.

6.4 Analytical Cartridge:
The analytical cartridge is a tray with the necessary fittings and components to bring together reagents, sample, and air to effect a chemical reaction, and is specifically configured for a particular analysis. Components include one or more of the following: glass mixing coils and fittings, heat baths, dialyzers, phase separators, and flowcell.

6.5 Detector
The detector measures the optical density (absorbance) of the product produced and converts this absorbance to a digital signal. The detector uses changeable wavelength filters and flowcells

6.6 Data Acquisition System
FASPac II data acquisition system provides hardware control and data reduction. It provides graphical presentation of data, which can be customized and/or exported. Analysis parameters are entered via on screen windows.

7. REAGENTSANDCONSUMABLEMATERIALS

Prepare all reagents in ammonia-free deionized water.

7.1 Stock Complexing Reagent (1L):
Dissolve 33 g of potassium sodium tartrate and 24 g of sodium citrate in 800 ml of DI water. Adjust the pH of the solution to pH 5.0 with sulfuric acid (2.0 to 2.2 ml). Dilute to 1 L and filter to 0.45 µm.

7.2 Working Complex Reagent(100mL):
Add 4 drops of Brij-35 for each 100 ml of complexing reagent required for the day's run.

7.3 Stock 10 N Sodium Hydroxide (1L):
Dissolve 50 g of NaOH in 100 ml of DI water and dilute to 125 ml. Cool and store in a tightly capped, plastic container.

7.4 Alkaline Phenol (125 mL):
Place stir bar in 125 ml flask with 100 ml DI water. While stirring, add 11 ml of 10 N NaOH. Slow add 1.5 mL of Liquid Phenol (88%) and dilute to 125 ml. Filter to.45 µm. Store in dark polyethylene bottle at 4°C. Stability is approximately 1 month. Discard the reagent if it becomes dark amber in color.

7.5 Sodium Hypochlorite (100 mL):
Add 2.5 ml of sodium hypochlorite solution to 75 ml DI water. Dilute to 100 ml. Prepare daily.

7.6 Sodium Nitroferricynanide (250 ml):
Dissolve .125 g sodium nitroferricyanide in 200 ml DI water and dilute to 250 ml. Filter to 0.45 µm. Store in an amber bottle at room temperature, where it is stable approximately 1 month.

7.7 Dilutent and Startup/Shutdown Solution (1L)
Add 1 to 2 ml of Brij-35 to 1000 ml DI water.

8. CALIBRATIONANDSTANDARDIZATION

8.1 Store certified stock (1000 mg/L) in original container at 4°C. Replace yearly.

8.2 Working Standards:
0.01mg/L, 0.05mg/L, 0.10mg/L, 0.20mg/L, 0 .60 mg/L, 1.00 mg/L and 3.00 (for some samples).

9. QUALITYCONTROL

9.1 Deionized water blanks are poured up weekly with the DWS samples. These serve as a check on the DI water system, and the bottle washing. A random sample of washed bottles are checked with a conductivity meter and any reading above 1.0 µmho indicates that set of bottles needs to be rinsed again. DI water blanks are also poured up for the Al collection. Blanks are taken into the field and treated as samples. Another check of the DI system is weekly measurements of the DI conductivity, when the NADP sample is measured. Any reading above 1.0 µmho indicates a dirty cartridge and the cation exchange cartridges are changed.

9.2 Stock solutions are made up or purchased yearly. Two aliquots are set aside in order to check the stock concentration if necessary.

9.3 QC concentrates from NSI are sent to the lab quarterly. They are analyzed for NO_3, NH_4, PO_4, and TKN. A value within the 95% C.I. is considered acceptable. Samples are run in triplicate. X bar charts will be used for these results. See Standard Methods, 1989.

9.4 A standard curve is determined before every analysis.
R squared must equal 0.98 or greater before samples are analyzed.

9.5 Daily QC checks are done with solutions made from the NSI concentrates. Acceptable ranges for each ion are based on 95% confidence limits.

9.6 Check limits of detection annually for all instruments.

9.7 Check calibration of balances twice a year.

9.8 When freezing samples, 3 DI blanks are frozen with the samples and analyzed with the samples.

10. Astoria2Operation

10.1 Preparation

1. Make sure all reagents are freshly prepared or are within allowable holding times and are free of particulates.
2. Verify that the correct filters and flowcell are installed in the detector.
3. Make sure there are no loose fittings or connections, and inspect pump tubes for excessive wear.

10.2 Operation

1. Turn on all instrument modules and computer.
2. Place all reagent lines in startup solution (DI water with appropriate surfactant). Place sampler wash lines in wash solution. Latch pump platens.
3. After flow has stabilized, verify a uniform bubble pattern throughout the manifold.
4. Turn on heating bath controls if required and adjust temperature properly for analysis.
5. Run the FASPac II software, enter user name and password.
6. Select the appropriate configuration from the list box in the tool bar at the top of the main menu. If one doesn't exist, see Configuration Setup in the operations manual. Enter a name for the run.
7. Connect the program to the system, select System – Connect from the main menu or click on the Connection (joined buckle, located in tool bar) or Connection Status (unjoined buckle) icon.
8. Select Channels button to bring channel windows to top. Select Options – Display Signal All and Options – Zero Signal and observe baseline on startup solution. When baseline is stable, place all lines in their appropriate reagents and allow to stabilize. Observe baseline, check for noise or drift, and aspirate a high standard to verify response. Consult troubleshooting guidelines if needed. Zero signal again.
9. Select the Sample Table button in the toolbar to access the sample table. Sample table should start with a Synchronization (SYNC), or high standard, followed by blanks to readjust baseline (w, W), calibrants (C1, C2, C3 …), QC standard, blanks, unknowns, Check Calibrant (CC1 or QC1), blanks, unknowns, etc. Check Calibrants should be run periodically to verify the calibration, and blanks should be run periodically to readjust baseline.
10. To start the run select Run – Begin, or select the green "start" icon.
11. When the calibration peaks have been displayed, select View – Calibration (or calibration icon) to view the calibration curve
12. When the run is complete, select the Sample Run or Sample Report icon to view results. Select File – Print to print a report; select File – Export to export to an Excel file. Select the red "abort" icon to end run.

10.3 Shutdown

1. Short term shutdown (1-4 days): Place reagent lines in startup solution for 15 – 20 minutes. Use high pump speed for only short periods, as extended periods will cause premature pump tube wear. Unlatch platens. Caution: Serious pump tube damage will occur if platens remain latched with the pump power off. Cover and store reagents and calibrants as appropriate to prevent deterioration.
2. Long term shutdown (4 or more days): Place reagent lines in deionized water for 15 – 20 minutes. Remove reagent lines from water and pump air until the cartridge is dry. Unlatch platens.

10.4 General Guidelines for Troubleshooting

1. Isolate and define the problem.
   Categorize the problem or symptom as chemistry, hydraulic, or electronic.
2. Do not overlook the obvious.
3. Rule out operator induced errors.
4. Eliminate one variable at a time.
5. Document the solution.
6. Refer to the operation manual for further trouble shooting solutions.

11. PRECISIONANDBIAS

11.1 Single operator precision and bias were obtained from the analysis of quality control check samples. QC samples were obtained from NSI Solutions and were diluted according to manufactures directions.

12. References

Astoria2Analyzer:OperationManual, Astoria-Pacific International, Clackamus, Oregon, 97015-0830, USA.

FASPacII:FlowAnalyzerSoftwrePackage,Version2.12, Astoria-Pacific International, Clackamus, Oregon, 97015-0830, USA.

FASPacIIQuickStart, Astoria-Pacific International, Clackamus, Oregon, 97015-0830, USA.

Table 1 - Method Detection Limits

Lab Desig-nation	Method	Instru-ment	Instrument in Operation	Units of reported values	mdl 2016 matrix=DI	2016 mdl matrix=2N KCl	2015 DI mdl	2015 KCl resin extract mdl	2015 KCl mdl	2014 DI mdl	2014 KCl resin extract mdl
NH4-N	automated Phenate method	Astoria 2 Autoanalyzer, Astoria-Pacific, Clackamas, Oregon	11/24/15/ 11/14/06	mg/L	0.001	0.003	0.001/ 0.002	0.007	0.007	0.002	0.006
		2014 KCl mdl	2013 DI	2013 1N KCl	2012 Matrix = 1N KCl	2012 mdl matrix H2O	MATRIX = H2O,2011 mdl	MATRIX = 2M KCl, 2011 mdl	MATRIX = H2O,2010 mdl	MATRIX = 2M KCl, 2010 mdl*	Matrix = H2O, 2007 mdl
		0.006	0.002	0.005	0.005	0.004	0.001	0.004	0.002	0.006	0.003

Table 2 - Recommended Sample Tray/Table Layout

Sample # Rack Position	Contents	Function	FASPac ID
1 SR:1	80 – 100 % Standard	Synchronization	SYNC
2 SR:2	Blank	Calculate Carryover	CO
3 SR:3	Blank	Wash	w
4 SR:4	Blank	Readjust baseline	W
5 SR:5	Standard 1	Calibration	C1
6 SR:6	Standard 2	Calibration	C2
7 SR:7	Standard 3	Calibration	C3
8 SR:8	Standard 4	Calibration	C4
9 SR:9	Standard 5	Calibration	C5
10 SR:10	Standard 6	Calibration	C6
11 SR:11	QC Standard	Verify calibration	QC1
12 SR:12	Blank	Wash	w
13 SR:13	Blank	Readjust baseline	W
14-24 1:1 – 1:10	Samples (unknowns)		
25 1:11	Check Calibrant	Verify calibration	CCV
26 1:12	Blank	Readjust baseline	W
27-37 1:13 – 1:22	Samples (unknowns		
38 1:23	Check Calibrant	Verify calibration	CCV
39 1:24	Blank	Readjust baseline	W
40 1:25	Blank	Pause sampler	PAUSE

Table 3: Example of Sampler Setup Window (Astoria *FASPac*)

Timing		■ Enable Autowash	
Sample Time	25	Autowash Interval	10
Wash Time	35		
Repetition Counts			
Unknowns	1		
Autowash	2		
Calibrants	2		

Table 4: Example of Channel Properties – Calibration Window (Astoria *FASPac*)

Calculate Concentrations From		Concentrations	
◘ Curves before		C1	0.000
Curves around		C2	0.010
Average all curves		C3	0.050
		C4	0.100
Curve Type		C5	0.200
1st Order Polynomial ▼ (drop down)		C6	0.600
Curve 1	Curve 2	C7	1.000

Figure 1

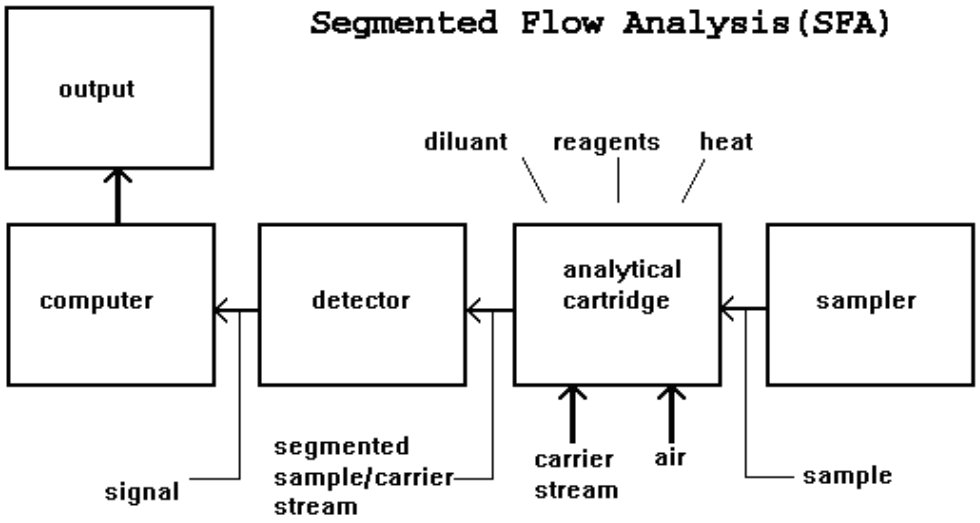
Segmented Flow Analysis(SFA)
output
diluant
reagents
heat
computer
detector
analytical cartridge
sampler
signal
segmented sample/carrier stream
carrier stream
air
sample

Figure 2

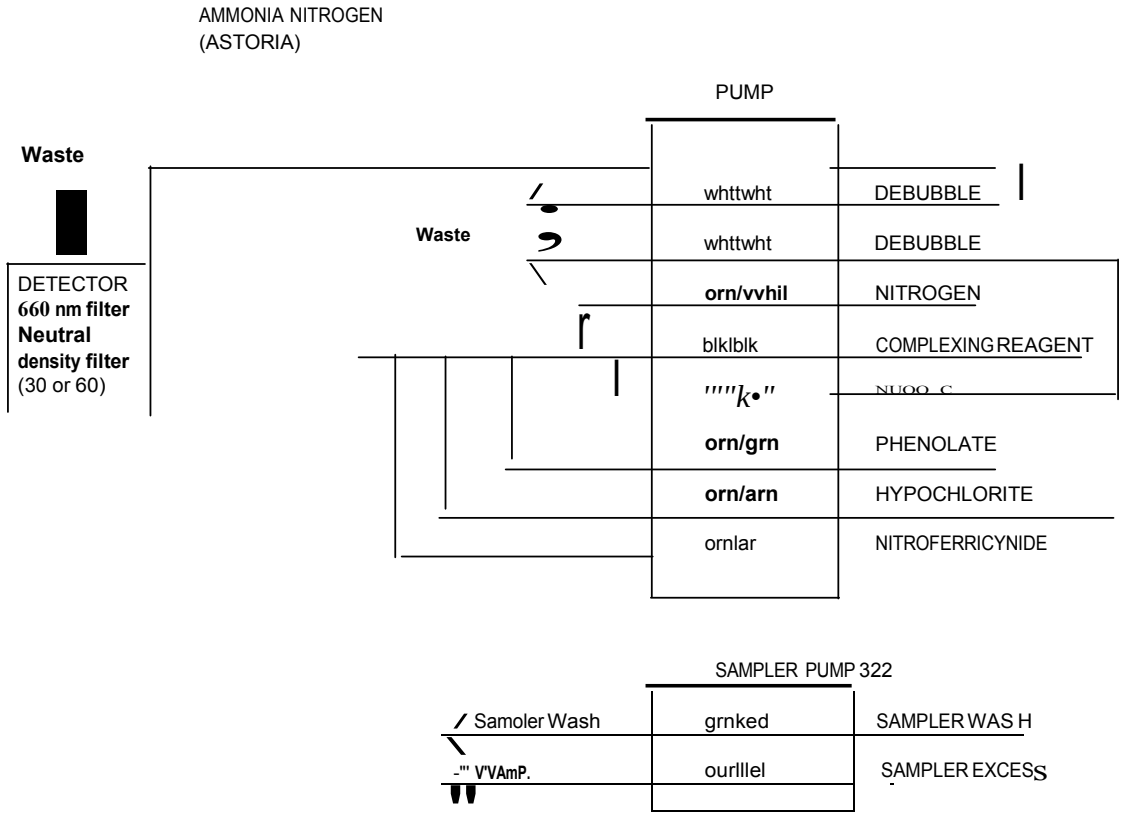
AMMONIA NITROGEN
(ASTORIA)
PUMP
Waste
Waste
DETECTOR
660 nm filter
Neutral
density filter
(30 or 60)
whttwht
DEBUBBLE
whttwht
DEBUBBLE
orn/vvhil
NITROGEN
blklblk
COMPLEXING REAGENT
orn/grn
PHENOLATE
orn/arn
HYPOCHLORITE
ornlar
NITROFERRICYNIDE
SAMPLER PUMP 322
Samoler Wash
grnked
SAMPLER WAS H
V'VAmP.
ourlllel
SAMPLER EXCESS

Automated Wet Chemistry
Nitrate by Cadmium Reduction

February 2015

Coweeta Hydrologic Lab
3160 Coweeta Lab Road
Otto, N.C. 28763

Sponsoring Agency:

U.S. Forest Service
University of Georgia

Chelcy Miniat, Project Leader

Laboratory Manager:

Cindi Brown

Chemist:

Cindi Brown

Laboratory Technician:

Carol Harper
Sheila Gregory

INDEX

Astoria

Section Number	Subject
01	Scope and Application
02	Summary of Method
03	Definitions
04	Interferences
05	Safety
06	Apparatus and Equipment
07	Reagents and Consumable Materials
08	Calibration and Standardization
09	Quality Control
10	Procedure and Calculations
11	Precision and Bias
12	References

TABLES

1. Method Detection Limits.
2. Recommended Sample Tray/Table Layout
3. Example of Sampler Set up Window
4. Example of Channel Properties – Calibration Window.

FIGURES

1. System diagram for Astoria.
2. Manifold setup for Nitrate.

Astoria

1. SCOPEANDAPPLICATION

1.1 This method is applicable to the determination of Nitrate in Stream, Precipitation, Thrufall, Lysimeter, and extracted soil samples.

1.2 Method detection limits are summarized in Table 1.

1.3 This method is not recommended for samples that are highly colored.

2. SUMMARYOFMETHOD

2.1 Samples are drawn from the automated sampler into a stream of reagents. Air bubbles are introduced to keep each sample discreet. Nitrate in the sample is reduced to Nitrite by passing through a cadmium coil reactor. The Nitrite then reacts with sulfanilamide and N-(1-naphthyl)-ethylenediamine dihydrochloride to form a highly colored azo dye. The reaction is measured at 520nm when the solution goes to the detector. The detector is a spectrometer that utilizes a flow cell to measure changes in transmitted light intensity. Beer's law correlates transmitted light intensity to the concentration of ions in the sample.

$\log(1/T) = abc$
where: T = transmittance
a = absorptivity
b = length of light path
c = concentration of ion (mg/L)

Calibration curves are constructed from a series of known standard concentrations. The concentration of the sample is calculated based on the calibration curve.

3. DEFINITIONS

3.1 Absorbance -- The measurement of the absorption of a particular wavelength of light as it passes through a liquid.

3.2 Colorimetry -- the measurement of light transmitted by a colored complex as a function of concentration.

3.3 Monochromator -- a detector which measures absorbance of light at specific wavelengths using a diffraction grating to select a specific wavelength of light.

3.4 Peristaltic Pump -- a pumping system which moves liquids by compressing flexible tubing between a solid surface (platen) and a roller.

3.5 Segmented Flow Analysis (SFA) -- a technique where the samples are separated by bubbles of a gas. The bubbles also help mix the reagents as they move through the manifold coils.

3.6 Transmittance -- The ratio of the radiant power transmitted by a sample to the radiant power incident on the sample

4. INTERFERENCES

4.1 Highly colored samples that absorb in the wavelength range of 520 - 540 nm can cause false positive readings. Samples at Coweeta are usually clear so this is no problem.

4.2 Samples high in turbidity must be filtered prior to analysis.

4.3 Samples high in iron or copper will need EDTA to form a complex.

4.4 Keep glassware that has been rinsed in HNO_3 separated for cations only.

5. SAFETY

5.1 Wear lab coat, gloves, and eye protection when using Hydrochloric Acid, Phosphoric Acid and Ammonium Hydroxide. Always work under a hood, vapors can be harmful. See appendix IV, Section 2 – Use of Bases
.

5.2 Wear lab coat, gloves, and eye protection when handling Cadmium coil.

5.3 When Cadmium coil has expired, store in tightly sealed container for later disposal at a hazardous waste treatment storage facility.

5.4 Wear lab coat, gloves, and eye protection when working around the manifold, tubes could become clogged and pressure may increase enough to cause a tube to pop loose.

5.5 Read the lab safety plan and ask the lab safety officer if you have any questions.

6. ApparatusandEquipment

6.1 Base Module:
The Astoria 2 Analyzer base module incorporates the Micropump, Cartridge Base, and Detector into one compact unit. The unit also contains digital heating bath controls and power supply.

6.2 Autosampler:
The Astoria 311 XYZ sampler module, with traveling washpot, holds up to three 60 position sample racks and a 20 position calibrants rack. Sample and wash times, automatic shut off and sampling mode are all microprocessor controlled from the FASPac software package.

6.3 Auxilary Pump:
The 322 Auxilary Pump provides an external supply of solution to the 311 sampler.

6.4 Analytical Cartridge:
The analytical cartridge is a tray with the necessary fittings and components to bring together reagents, sample, and air to effect a chemical reaction, and is specifically configured for a particular analysis. Components include one or more of the following: glass mixing coils and fittings, heat baths, dialyzers, phase separators, and flowcell.

6.5 Detector
The detector measures the optical density (absorbance) of the product produced and converts this absorbance to a digital signal. The detector uses changeable wavelength filters and flowcells

6.6 Data Acquisition System
FASPac II data acquisition system provides hardware control and data reduction. It provides graphical presentation of data, which can be customized and/or exported. Analysis parameters are entered via on screen windows.

7. REAGENTSANDCONSUMABLEMATERIALS

7.1 Working Imidizole (0.05) M Buffer
Add 0.5 ml stock copper sulfate 'B', 0.001 M to 50 ml of stock imidizole buffer, 0.1 M. Dilute to 100 ml with DI water, add 0.1 ml (3 drops) 50 % Triton X-100 and mix thoroughly. Prepare fresh daily.

7.2 1.0 N Hydrochloric Acid
Add 8.3 ml of concentrated hydrochloric acid to about 80 ml deionized water contained in 100 ml volumetric flask. Dilute to the mark with deionized water and mix well.

7.3 Cupric Sulfate Solution
Dissolve 20 g of cupric sulfate in approximately 900 ml deionized water contained in a 1 L volumetric flask. Dilute the solution to the mark with deionized water and mix well.

7.4 Stock Copper Sulfate Solution 'A', 0.01 M
Dissolve 2.5 g of copper sulfate in about 600 ml of DI water. Dilute to one liter with DI water.

7.5 Stock Copper Sulfate Solution 'B', 0.001 M
Dilute 10.0 ml of stock copper sulfate, 'A' 0.01 M to 100 ml with DI water

7.6 50 % Triton X-100
Add 50 ml Triton X 100 to 50 ml isopropanol. Mix thoroughly.

7.7 Start-Up Solution
Add .1 ml of 50 % Triton X-100 solution to every 100 ml DI water.

8. CALIBRATIONANDSTANDARDIZATION

8.1 Store certified stock (1000 mg/L) in original container at 4°C. Replace annually.

8.2 Working Standards:
0.01, 0.05, 0.10, 0.20, 0.600 mg/L, 1.000 mg/L

9. QUALITYCONTROL

9.1 Deionized water blanks are poured up weekly with the DWS samples. These serve as a check on the DI water system, and the bottle washing. A random sample of washed bottles are checked with a conductivity meter and any reading above 1.0 μmho indicates that set of bottles needs to be rinsed again. DI water blanks are also poured up for the Al collection. Blanks are taken into the field and treated as samples. Another check of the DI system is weekly measurements of the DI conductivity, when the NADP sample is measured. Any reading above 1.0 μmho indicates a dirty cartridge and the cation exchange cartridges are changed.

9.2 Stock solutions are made up or purchased yearly. Two aliquots are set aside in order to check the stock concentration if necessary.

9.3 QC concentrates from NSI are sent to the lab quarterly. They are analyzed for NO_3, NH_4, PO_4, and TKN. A value within the 95% C.I. is considered acceptable. Samples are run in triplicate. X bar charts will be used for these results. See Standard Methods, 1989.

9.4 A standard curve is determined before every analysis.
R squared must equal 0.98 or greater before samples are analyzed.

9.5 Daily QC checks are done with solutions made from the NSI concentrates. Acceptable range for each ion are based on 95% confidence limits.

9.6 Check limits of detection annually for all instruments.

9.7 Check calibration of balances twice a year.

9.8 When freezing samples for later analysis, 3 DI blanks must be frozen with the samples and analyzed with the samples.

10. Astoria2Operation

10.1 Preparation

1. Make sure all reagents are freshly prepared or are within allowable holding times and are free of particulates.
2. Verify that the correct filters and flowcell are installed in the detector.
3. Make sure there are no loose fittings or connections, and inspect pump tubes for excessive wear.

10.2 Operation

1. Turn on all instrument modules and computer.
2. Place all reagent lines in startup solution (DI water with appropriate surfactant). Place sampler wash lines in wash solution. Latch pump platens.
3. After flow has stabilized, verify a uniform bubble pattern throughout the manifold.
4. Turn on heating bath controls if required and adjust temperature properly for analysis.
5. Run the FASPac II software, enter user name and password.
6. Select the appropriate configuration from the list box in the tool bar at the top of the main menu. If one doesn't exist, see Configuration Setup in the operations manual. Enter a name for the run.
7. Connect the program to the system, select System – Connect from the main menu or click on the Connection (joined buckle, located in tool bar) or Connection Status (unjointed buckle) icon.
8. Select Channels button to bring channel windows to top. Select Options – Display Signal All and Options – Zero Signal and observe baseline on startup solution. When baseline is stable, place all lines in their appropriate reagents and allow to stabilize. Observe baseline, check for noise or drift, and aspirate a high standard to verify response. Consult troubleshooting guidelines if needed. Zero signal again.
9. Select the Sample Table button in the toolbar to access the sample table. Sample table should start with a Synchronization (SYNC), or high standard, followed by blanks to readjust baseline (w, W), calibrants (C1, C2, C3 …), QC standard, blanks, unknowns, Check Calibrant (CC1 or QC1), blanks, unknowns, etc. Check Calibrants should be run periodically to verify the calibration, and blanks should be run periodically to readjust baseline.
10. To start the run select Run – Begin, or select the green "start" icon.
11. When the calibration peaks have been displayed, select View – Calibration (or calibration icon) to view the calibration curve
12. When the run is complete, select the Sample Run or Sample Report icon to view results. Select File – Print to print a report; select File – Export to export to an Excel file. Select the red "abort" icon to end run.

10.3 Shutdown

1. Short term shutdown (1-4 days): Place reagent lines in startup solution for 15 – 20 minutes. Use high pump speed for only short periods, as extended periods will cause premature pump tube wear. Unlatch platens. Caution: Serious pump tube damage will occur if platens remain latched with the pump power off. Cover and store reagents and calibrants as appropriate to prevent deterioration.
2. Long term shutdown (4 or more days): Place reagent lines in deionized water for 15 – 20 minutes. Remove reagent lines from water and pump air until the cartridge is dry. Unlatch platens.

10.4 General Guidelines for Troubleshooting

1. Isolate and define the problem.
   Categorize the problem or symptom as chemistry, hydraulic, or electronic.
2. Do not overlook the obvious.
3. Rule out operator induced errors.
4. Eliminate one variable at a time.
5. Document the solution.
6. Refer to the operation manual for further trouble shooting solutions.

11. PRECISIONANDBIAS

11.1 Single operator precision and bias were obtained from the analysis of quality control check samples. QC samples were obtained from NSI Solutions and were diluted according to manufactures directions.

12. References

Astoria2Analyzer:OperationManual, Astoria-Pacific International, Clackamus, Oregon, 97015-0830, USA.

FASPacII:FlowAnalyzerSoftwrePackage,Version2.12, Astoria-Pacific International, Clackamus, Oregon, 97015-0830, USA.

FASPacIIQuickStart, Astoria-Pacific International, Clackamus, Oregon, 97015-0830, USA.

Table 1 - Method Detection Limits

Lab Desig-nation	Method	Instru-ment	Instrument in Operation	Units of reported values	2016 mdl matrix=2N KCl	2015 DI mdl	2015 KCl resin extract mdl	2015 KCl mdl	2014 DI mdl	2014 KCl resin extract mdl	2014 KCl mdl	2013 DI
NO3-N	reduction using a cadmium coil	Astoria 2 Autoanalyzer, Astoria-Pacific, Astoria, Astoria,	11/14/06	mg/L	0.004	0.001	0.003	0.003	0.015	0.015	0.003	0.002
					2013 1N KCl	2012 Matrix = 1N KCl	2012 mdl matrix H2O	MATRIX = H2O,2011 mdl	MATRIX = 2M KCl, 2011 mdl	MATRIX = H2O,2010 mdl	MATRIX = 2M KCl, 2010 mdl*	Matrix = H2O, 2007 mdl
					0.003	0.002	na	0.001	0.002	0.001	0.004	0.006

Table 2. Recommended Sample Tray/Table Layout

Sample # Rack Position	Contents	Function	FASPac ID
1 SR:1	80 – 100 % Standard	Synchronization	SYNC
2 SR:2	Blank	Calculate Carryover	CO
3 SR:3	Blank	Wash	w
4 SR:4	Blank	Readjust baseline	W
5 SR:5	Standard 1	Calibration	C1
6 SR:6	Standard 2	Calibration	C2
7 SR:7	Standard 3	Calibration	C3
8 SR:8	Standard 4	Calibration	C4
9 SR:9	Standard 5	Calibration	C5
10 SR:10	Standard 6	Calibration	C6
11 SR:11	QC Standard	Verify calibration	QC1
12 SR:12	Blank	Wash	w
13 SR:13	Blank	Readjust baseline	W
14-24 1:1 – 1:10	Samples (unknowns)		
25 1:11	Check Calibrant	Verify calibration	CCV
26 1:12	Blank	Readjust baseline	W
27-37 1:13 – 1:22	Samples (unknowns		
38 1:23	Check Calibrant	Verify calibration	CCV
39 1:24	Blank	Readjust baseline	W
40 1:25	Blank	Pause sampler	PAUSE

Table 3: Example of Sampler Setup Window (Astoria *FASPac*)

Timing		■ Enable Autowash	
Sample Time	25	Autowash Interval	10
Wash Time	35		
Repetition Counts			
Unknowns	1		
Autowash	2		
Calibrants	2		

Table 4: Example of Channel Properties – Calibration Window (Astoria *FASPac*)

Calculate Concentrations From		Concentrations	
◘ Curves before		C1	0.000
Curves around		C2	0.010
Average all curves		C3	0.050
		C4	0.100
Curve Type		C5	0.200
1st Order Polynomial ▼ (drop down)		C6	0.600
Curve 1	Curve 2	C7	1.000

Figure 1

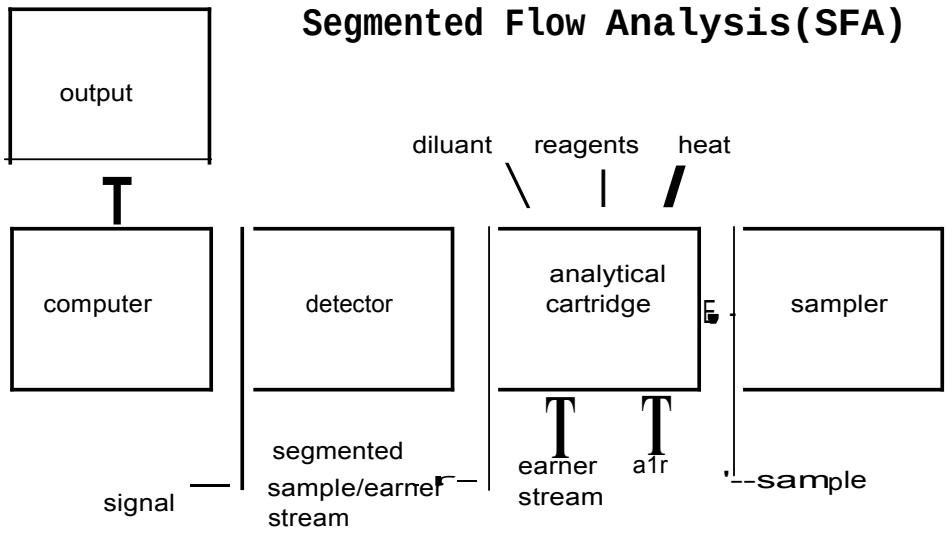
Segmented Flow Analysis(SFA)
output
diluant
reagents
heat
computer
detector
analytical cartridge
sampler
segmented sample/earner stream
signal
earner stream
a1r
sample

Figure 2

NITRATE!NITRITE NITROGEN
(ASTORIA)

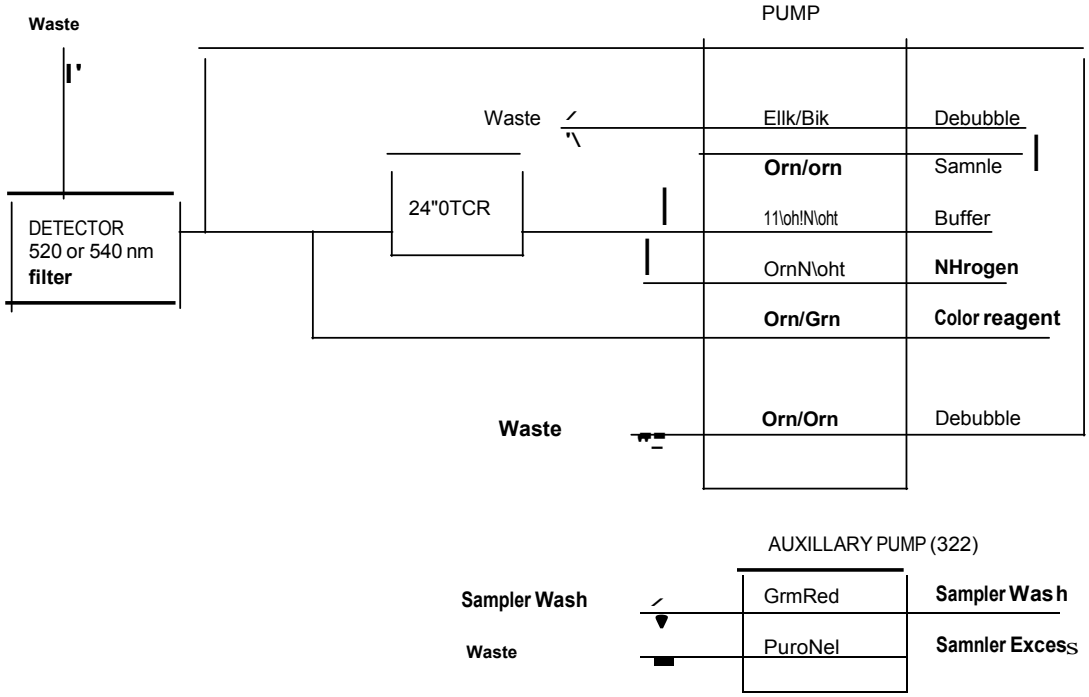

Automated Wet Chemistry
For Orthophosphate

February 2015

Coweeta Hydrologic Lab
3160 Coweeta Lab Road
Otto, N.C. 28763

Sponsoring Agency: U.S.

Forest Service
University of Georgia

Chelcy Miniat, Project Leader

Laboratory Manager:

Cindi Brown

Chemist:

Cindi Brown

Laboratory Technician:

Carol Harper
Sheila Gregory

INDEX

Astoria

Section Number	Subject
01	Scope and Application
02	Summary of Method
03	Definitions
04	Interferences
05	Safety
06	Apparatus and Equipment
07	Reagents and Consumable Materials
08	Calibration and Standardization
09	Quality Control
10	Procedure and Calculations
11	Precision and Bias
12	References

TABLES

1. Method Detection Limits.
2. Recommended Sample Tray/Table Layout
3. Example of Sampler Set up Window
4. Example of Channel Properties – Calibration Window.

FIGURES

1. System diagram for Astoria.
2. Manifold setup for Orthophosphate.

Astoria

1. SCOPEANDAPPLICATION

1.1 This method is applicable to the determination of Orthophosphate in Stream, Precipitation, Thrufall, Lysimeter, and extracted soil samples.

1.2 Orthophosphate measured by this method is Total Reactive Phosphorus. Refer to section 424 in Standard Methods for the Examination of Water and Wastewater for further information on fractions of Phosphorus.

1.3 Method detection limits are summarized in Table 1.

2. SUMMARYOFMETHOD

2.1 Samples are drawn from the automated sampler into a stream of reagents. Air bubbles are introduced to keep each sample discreet. Orthophosphate in the sample reacts with Ammonium Molybdate $(NH_4)_6Mo_7O_{24} \cdot 4H_2O$ and Antimony Potassium Tartrate $K(SbO)C_4H_4O_6 \cdot {}^1/_2H_2O$ in acid media to form an Antimony-phosphomolybdate complex. The complex is reduced with Ascorbic Acid $C_6H_8O_6$ to form a blue color that is measured at 660nm when the solution goes to the detector. The detector is a spectrometer that utilizes a flow cell to measure changes in transmitted light intensity. Beer's law correlates transmitted light intensity to the concentration of ions in the sample.

log (1/T) = abc
where: T = transmittance
a = absorptivity
b = length of light path
c = concentration of ion (mg/L)

Calibration curves are constructed from a series of known standard concentrations. The concentration of the sample is calculated based on the calibration curve.

3. DEFINITIONS

3.1 Absorbance -- The measurement of the absorption of a particular wavelength of light as it passes through a liquid.

3.2 Colorimetry -- the measurement of light transmitted by a colored complex as a function of concentration.

3.3 Monochromator -- a detector which measures absorbance of light at specific wavelengths using a diffraction grating to select a specific wavelength of light.

3.4 Peristaltic Pump -- a pumping system which moves liquids by compressing flexible tubing between a solid surface (platen) and a roller.

3.5 Segmented Flow Analysis (SFA) -- a technique where the samples are separated by bubbles of a gas. The bubbles also help mix the reagents as they move through the manifold coils.

3.6 Transmittance -- The ratio of the radiant power transmitted by a sample to the radiant power incident on the sample

4. INTERFERENCES

4.1 Highly colored samples that absorb in the wavelength range of 640 - 660nm can cause false positive readings. Samples from coastal waters can present problems.

4.2 Samples high in turbidity must be filtered prior to analysis.

4.3 Silica concentrations greater than 10mg/L can cause positive interference. SiO_2 concentrations of 20mg/L would cause .005mg/L positive readings. Samples at Coweeta run below 20mg/L.

5. SAFETY

5.1 **Wear lab coat, gloves, and eye protection when using Sulfuric Acid, Antimony Potassium Tartrate, and Ammonium Molybdate. Always work under a hood, vapors can be harmful. See appendix IV, Section 1 – Use of Acids.**

5.4 Wear lab coat, gloves, and eye protection when working around the manifold, tubes could become clogged and pressure may increase enough to cause a tube to pop loose.

5.5 Read the lab safety plan and ask the lab safety officer if you have any questions.

6. ApparatusandEquipment

6.1 Base Module:
The Astoria 2 Analyzer base module incorporates the Micropump, Cartridge Base, and Detector into one compact unit. The unit also contains digital heating bath controls and power supply.

6.2 Autosampler:
The Astoria 311 XYZ sampler module, with traveling washpot, holds up to three 60 position sample racks and a 20 position calibrants rack. Sample and wash times, automatic shut off and sampling mode are all microprocessor controlled from the FASPac software package.

6.3 Auxilary Pump:
The 322 Auxilary Pump provides an external supply of solution to the 311 sampler.

6.4 Analytical Cartridge:
The analytical cartridge is a tray with the necessary fittings and components to bring together reagents, sample, and air to effect a chemical reaction, and is specifically configured for a particular analysis. Components include one or more of the following: glass mixing coils and fittings, heat baths, dialyzers, phase separators, and flowcell.

6.5 Detector
The detector measures the optical density (absorbance) of the product produced and converts this absorbance to a digital signal. The detector uses changeable wavelength filters and flowcells

6.6 Data Acquisition System
FASPac II data acquisition system provides hardware control and data reduction. It provides graphical presentation of data, which can be customized and/or exported. Analysis parameters are entered via on screen windows.

7. REAGENTSANDCONSUMABLEMATERIALS

Prepare all reagents in Phosphate free DI water. Filter the all reagents prior to use.

7.1 Sulfuric Acid, .5N (250 mL)
Add 35 mL of concentrated Sulfuric Acid H_2SO_4 to 200 mL of DI water. Mix well and dilute to final volume of 250 mL.

7.2 Stock Ammonium Molydate Reagent (250 mL)
Dissolve 10g of Ammonium Molybdate $(NH_4)_6Mo_7O_{24} \cdot 4H_2O$ in 200 mL of DI water. Dilute to 250 mL with DI water. Store reagent in dark polyethylene bottle at 4° C. Reagent is not stable for more than two days. If reagent turns a faint blue, then remake.

7.3 Stock Antimony Potassium Tartrate (250mL)
Dissolve .75g of Antimony Potassium Tartrate $K(SbO)C_4H_4O_6 \cdot {}^1/_2 2H_2O$ in 200 mL of DI water. Mix well and dlute to 250 mL with DI water. Store in a plastic bottle at 4^oC for no more than one week.

7.4 Acorbic Acid (250 mL)
Dissolve 4.4g of Ascorbic Acid $C_6H_8O_6$ in 200mL DI water with 12.5 mL of Acetone. Dilute to 250 mL with DI water. Store in a plastic bottle at 4^oC for no more than one week.

7.5 Color Reagent (200 mL)
Stock Sulfuric acid, 5N----------100mL
Stock Antimony Potassium Tartrate Solution--------10mL
Stock Ammonium Molybdate Solution----------30mL
Stock Ascorbic Acid Solution----------60mL
Dowfax 2A1----------0.5mL

Add reagents in the order stated and mix after each addition. This will prevent the ascorbic acid from turning a darker color when the solution is first made. Prepare reagent daily.

8. CALIBRATIONANDSTANDARDIZATION

8.1 Anion calibrants, 1000mg/L are purchased from Ricca yearly.

8.2 Working Standards:
For Coweeta samples: .010 mg/L, .050 mg/L, .100 mg/L, .200 mg/L
For Double Acid Extraction samples: 5.0mg/L, 10.0mg/L, 20.0mg/L, 30.0mg/L

9. QUALITYCONTROL

9.1 Deionized water blanks are poured up weekly with the DWS samples. These serve as a check on the DI water system, and the bottle washing. A random sample of washed bottles are checked with a conductivity meter and any reading above 1.0 μmho indicates that set of bottles needs to be rinsed again. DI water blanks are also poured up for the Al collection. Blanks are taken into the field and treated as samples. Another check of the DI system is weekly measurements of the DI conductivity, when the NADP sample is measured. Any reading above 1.0 μmho indicates a dirty cartridge and the cation exchange cartridges are changed.

9.2 Stock solutions are made up or purchased yearly. Two aliquots are set aside in order to check the stock concentration if necessary.

9.3 QC concentrates from NSI are sent to the lab quarterly. They are analyzed for SO_4, Cl, NO_3,

NH_4, PO_4, and TKN. A value within the 95% C.I. is considered acceptable. Samples are run in triplicate. X bar charts will be used for these results. See Standard Methods, 1989. Perkin-Elmer cation concentrate (Alternate Metals II) is used to check the Atomic Absorption Spectrophotometer. It is purchased yearly.

9.4 A standard curve is determined before every analysis with the Astoria. R squared must equal 0.98 or greater before samples are analyzed.

9.5 Daily QC checks are done with solutions made from the NSI concentrates. Acceptable ranges for each ion are based on 95% confidence limits.

9.6 Check limits of detection annually for all instruments.

9.7 Check calibration of balances twice a year.

9.8 When freezing samples for later analysis, 3 DI blanks must be frozen with the samples and analyzed with the samples.

10.1 Preparation

1. Make sure all reagents are freshly prepared or are within allowable holding times and are free of particulates.
2. Verify that the correct filters and flowcell are installed in the detector.
3. Make sure there are no loose fittings or connections, and inspect pump tubes for excessive wear.

10.2 Operation

1. Turn on all instrument modules and computer.
2. Place all reagent lines in startup solution (DI water with appropriate surfactant). Place sampler wash lines in wash solution. Latch pump platens.
3. After flow has stabilized, verify a uniform bubble pattern throughout the manifold.
4. Turn on heating bath controls if required and adjust temperature properly for analysis.
5. Run the FASPac II software, enter user name and password.
6. Select the appropriate configuration from the list box in the tool bar at the top of the main menu. If one doesn't exist, see Configuration Setup in the operations manual. Enter a name for the run.
7. Connect the program to the system, select System – Connect from the main menu or click on the Connection (joined buckle, located in toolbar) or Connection Status (unjoined buckle) icon.
8. Select Channels button to bring channel windows to top. Select Options – Display Signal All and Options – Zero Signal and observe baseline on startup solution. When baseline is stable, place all lines in their appropriate reagents and allow stabilizing. Observe baseline, check for noise or drift, and aspirate a high standard to verify response. Consult troubleshooting guidelines if needed. Zero signal again.
9. Select the Sample Table button in the toolbar to access the sample table. Sample table should start with a Synchronization (SYNC), or high standard, followed by blanks to readjust baseline (w, W), calibrants (C1, C2, C3 …), QC standard, blanks, unknowns, Check calibrant (CC1 or QC1), blanks, unknowns, etc. Check Calibrants should be run periodically to verify the calibration, and blanks should be run periodically to readjust baseline.
10. To start the run select Run – Begin, or select the green "start" icon.
11. When the calibration peaks have been displayed, select View – Calibration (or calibration icon) to view the calibration curve
12. When the run is complete, select the Sample Run or Sample Report icon to view results. Select File – Print to print a report; select File – Export to export to an Excel file. Select the red "abort" icon to end run.

10.3 Shutdown

1. Short term shutdown (1-4 days): Place reagent lines in startup solution for 15 – 20 minutes. Use high pump speed for only short periods, as extended periods will cause premature pump tube wear. Unlatch platens. Caution: Serious pump tube damage will occur if platens remain latched with the pump power off. Cover and store reagents and calibrants as appropriate to prevent deterioration.
2. Long term shutdown (4 or more days): Place reagent lines in deionized water for 15 – 20 minutes. Remove reagent lines from water and pump air until the cartridge is dry. Unlatch platens.

10.4 General Guidelines for Troubleshooting

1. Isolate and define the problem.
   Categorize the problem or symptom as chemistry, hydraulic, or electronic.
2. Do not overlook the obvious.
3. Rule out operator induced errors.
4. Eliminate one variable at a time.
5. Document the solution.
6. Refer to the operation manual for further trouble shooting solutions.

11. PRECISIONANDBIAS

11.1 Single operator precision and bias were obtained from the analysis of quality control check samples. QC samples were obtained from NSI Solutions and were diluted according to manufactures directions.

12. References

Astoria2Analyzer:OperationManual, Astoria-Pacific International, Clackamus, Oregon, 97015-0830, USA.

FASPacII:FlowAnalyzerSoftwrePackage,Version2.12, Astoria-Pacific International, Clackamus, Oregon, 97015-0830, USA.

FASPacIIQuickStart, Astoria-Pacific International, Clackamus, Oregon, 97015-0830, USA.

Table 1 - Method Detection Limits

Lab Desig-nation	Method	Instru-ment	Instrument in Operation	Units of reported values	2016 mdl matrix=2N KCl	2015 DI mdl	2015 KCl resin extract mdl
PO4	Ammonium Molybdate / Antimony Potassium	Astoria 2 Autoanalyzer, Astoria-Pacific, Astoria, Astoria,	11/14/06	mg/L	0.032	0.002	0.004
2014 DI mdl	2013 DI	2012 Matrix = 1N KCl	2012 mdl matrix H2O	MATRIX = H2O,2011 mdl	MATRIX = 2M KCl, 2011 mdl	MATRIX = H2O,2010 mdl	Matrix = H2O, 2007 mdl
0.003	0.004	0.009	0.003	0.001	0.001	0.004	0.014

Table 2: Recommended Sample Tray/Table Layout

Sample # Rack Position	Contents	Function	FASPac ID
1 SR:1	80 – 100 % Standard	Synchronization	SYNC
2 SR:2	Blank	Calculate Carryover	CO
3 SR:3	Blank	Wash	w
4 SR:4	Blank	Readjust baseline	W
5 SR:5	Standard 1	Calibration	C1
6 SR:6	Standard 2	Calibration	C2
7 SR:7	Standard 3	Calibration	C3
8 SR:8	Standard 4	Calibration	C4
9 SR:9	Standard 5	Calibration	C5
10 SR:10	Standard 6	Calibration	C6
11 SR:11	QC Standard	Verify calibration	QC1
12 SR:12	Blank	Wash	w
13 SR:13	Blank	Readjust baseline	W
14-24 1:1 – 1:10	Samples (unknowns)		
25 1:11	Check Calibrant	Verify calibration	CCV
26 1:12	Blank	Readjust baseline	W
27-37 1:13 – 1:22	Samples (unknowns		
38 1:23	Check Calibrant	Verify calibration	CCV
39 1:24	Blank	Readjust baseline	W
40 1:25	Blank	Pause sampler	PAUSE

Table 3: Example of Sampler Setup Window (Astoria *FASPac*)

Timing		■ Enable Autowash	
Sample Time	25	Autowash Interval	10
Wash Time	35		
Repetition Counts			
Unknowns	1		
Autowash	2		
Calibrants	2		

Table 4: Example of Channel Properties – Calibration Window (Astoria *FASPac*)

Calculate Concentrations From		Concentrations	
◘ Curves before		C1	0.000
Curves around		C2	0.010
Average all curves		C3	0.050
		C4	0.100
Curve Type		C5	0.200
1st Order Polynomial ▼ (drop down)		C6	0.600
Curve 1	Curve 2	C7	1.000

Figure 1

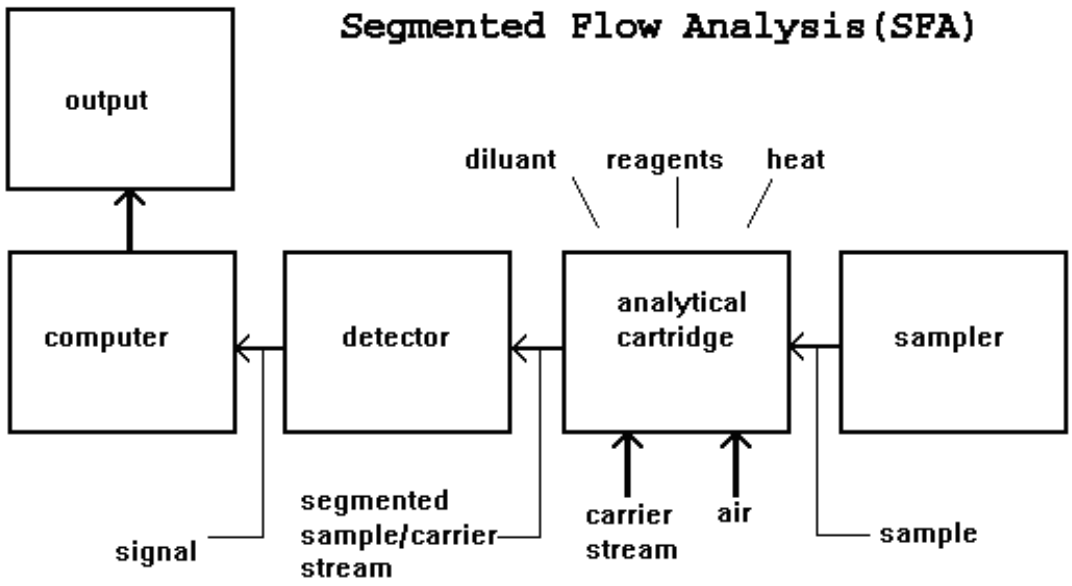
Segmented Flow Analysis(SFA)
output
diluant
reagents
heat
computer
detector
analytical cartridge
sampler
signal
segmented sample/carrier stream
carrier stream
air
sample

Figure 2

ORTHO-PHOSPHATE
flow-diagram ASTORIA2

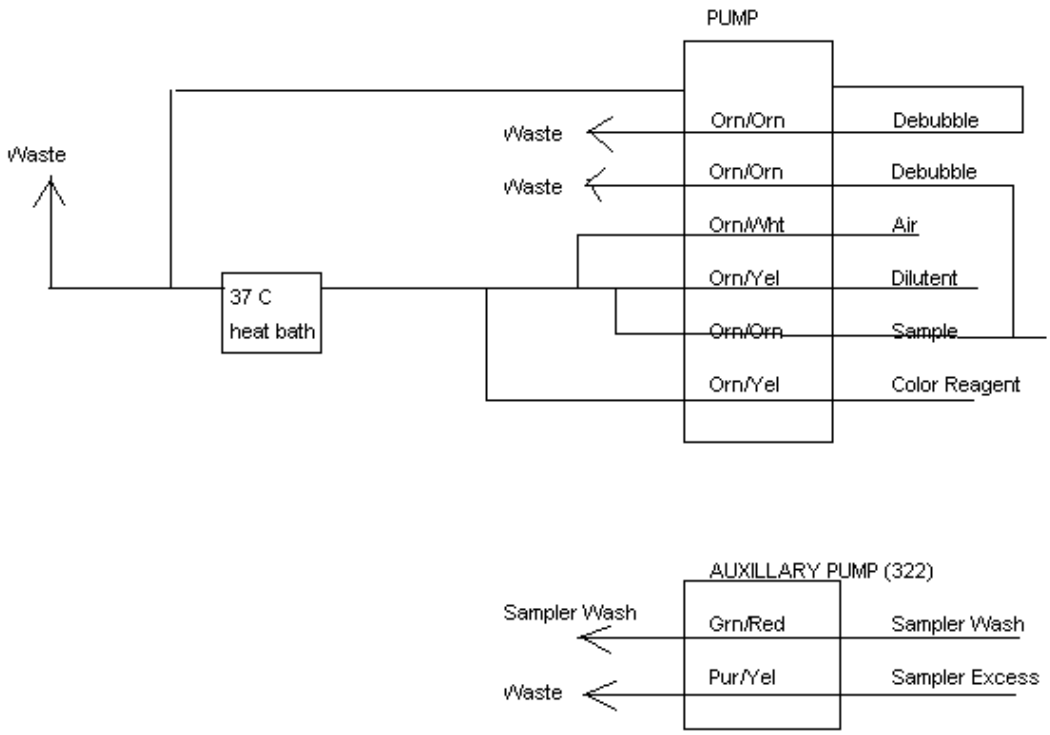

Automated Wet Chemistry
For Silicate

February 2015

Coweeta Hydrologic Lab
3160 Coweeta Lab Road
Otto, N.C. 28763

Sponsoring Agency:

U.S. Forest Service
University of Georgia

Chelcy Miniat, Project Leader

Laboratory Manager:

Cindi Brown

Chemist:

Cindi Brown

Laboratory Technician:

Carol Harper
Sheila Gregory

INDEX

Astoria

Section Number	Subject
01	Scope and Application
02	Summary of Method
03	Definitions
04	Interferences
05	Safety
06	Apparatus and Equipment
07	Reagents and Consumable Materials
08	Calibration and Standardization
09	Quality Control
10	Procedure and Calculations
11	Precision and Bias
12	References

TABLES

1. Method Detection Limits.
2. Recommended Sample Tray/Table Layout
3. Example of Sampler Set up Window
4. Example of Channel Properties – Calibration Window.

FIGURES

1. System diagram for Astoria.
2. Manifold setup for Silicate.

Astoria

1. SCOPEANDAPPLICATION

1.1 This method is applicable to the determination of Silica in Stream, Precipitation, Thrufall, and Lysimeter samples.

1.2 Method detection limits are summarized in Table 1.

1.3 This method is not recommended for samples that have been frozen.

2. SUMMARYOFMETHOD

2.1 Samples are drawn from the automated sampler into a stream of reagents. Air bubbles are introduced to keep each sample discreet. The Silicate then reacts with Ammonium The complex is reduced by Ascorbic Acid $C_6H_8O_6$ to form Molybdenum Blue. The reaction is measured at 660nm when the solution goes to the detector. The detector is a spectrometer that utilizes a flow cell to measure changes in transmitted light intensity. Beer's law correlates transmitted light intensity to the concentration of ions in the sample.

log (1/T) = abc
where: T = transmittance
a = absorptivity
b = length of light path
c = concentration of ion (mg/L)

Calibration curves are constructed from a series of known standard concentrations. The concentration of the sample is calculated based on the calibration curve.

3. DEFINITIONS

3.1 Absorbance -- The measurement of the absorption of a particular wavelength of light as it passes through a liquid.

3.2 Colorimetry -- the measurement of light transmitted by a colored complex as a function of concentration.

3.3 Monochromator -- a detector which measures absorbance of light at specific wavelengths using a diffraction grating to select a specific wavelength of light.

3.4 Peristaltic Pump -- a pumping system which moves liquids by compressing flexible tubing between a solid surface (platen) and a roller.

3.5 Segmented Flow Analysis (SFA) -- a technique where the samples are separated by bubbles of a gas. The bubbles also help mix the reagents as they move through the manifold coils.

3.6 Transmittance -- The ratio of the radiant power transmitted by a sample to the radiant power incident on the sample

4. INTERFERENCES

4.1 Highly colored samples that absorb in the wavelength range of 640 - 660nm can cause false positive readings. Samples at Coweeta are usually clear so this is no problem.

4.2 Samples high in turbidity must be filtered prior to analysis.

4.3 Phosphates interfere but are suppressed by Oxalic Acid.

4.4 Do not freeze samples, silica will precipitate out of solution and cause false negative readings.

5. SAFETY

5.1 Wear lab coat, gloves, and eye protection when using Sulfuric Acid, Oxalic Acid Acetone, and Ammonium Molydate. Always work under a hood, vapors can be harmful. See appendix IV, Section 1 – Use of Acids.

5.4 Wear lab coat, gloves, and eye protection when working around the manifold, tubes could become clogged and pressure may increase enough to cause a tube to pop loose.

5.5 Read the lab safety plan and ask the lab safety officer if you have any questions.

6. ApparatusandEquipment

6.1 Base Module:
The Astoria 2 Analyzer base module incorporates the Micropump, Cartridge Base, and Detector into one compact unit. The unit also contains digital heating bath controls and power supply.

6.2 Autosampler:
The Astoria 311 XYZ sampler module, with traveling washpot, holds up to three 60 position sample racks and a 20 position calibrants rack. Sample and wash times, automatic shut off and sampling mode are all microprocessor controlled from the FASPac software package.

6.3 Auxilary Pump:
The 322 Auxilary Pump provides an external supply of solution to the 311 sampler.

6.4 Analytical Cartridge:
The analytical cartridge is a tray with the necessary fittings and components to bring together reagents, sample, and air to effect a chemical reaction, and is specifically configured for a particular analysis. Components include one or more of the following: glass mixing coils and fittings, heat baths, dialyzers, phase separators, and flowcell.

6.5 Detector
The detector measures the optical density (absorbance) of the product produced and converts this absorbance to a digital signal. The detector uses changeable wavelength filters and flowcells

6.6 Data Acquisition System
FASPac II data acquisition system provides hardware control and data reduction. It provides graphical presentation of data, which can be customized and/or exported. Analysis parameters are entered via on screen windows.

7. REAGENTSANDCONSUMABLEMATERIALS

7.1 Add 2.8 ml concentrated sulfuric acid to 800 ml DI water. Mix well and dilute to 1L.

7.2 Stock Stannous Chloride
While stirring, add 10 ml of hydrochloric acid to 10 ml DI water. Dissolve 10 g of stannous chloride in the acidic solution. Heating may be necessary t obtain complete dissolution. Store the stock solution in a tightly closed plastic container and refrigerate at 2 – 8 °C.

7.3 Hydrochloric Acid 1.2 N
Add 100 ml of hydrochloric acid to 800 ml DI water. Dilute to 1 L. Filter to 45 µm and store in a plasitic container.

7.4 Working Stannous Chloride Reagent
Mix 1.0 ml of stock stannous chloride solution with 50 ml of 1.2 N hydrochloric solution in a plastic container. Prepare fresh daily. Add to sample stream last (at least 5 minutes after adding molybdate solution).

7.5 Startup Solution/Shutdown Solution
Add 2-3 ml Dowfax 2A1 per 1 L DI water.

8. Calibration and Standardization

8.1 Use certified anion stock solution (1000 mg/L). Store in original plastic container at 4 °C. Replace after 1 year.

8.2 Working Standards:
For stream samples: 2.0 mg/L, 4.0 mg/L, 8.0 mg/L, 12.0 mg/L, 20.0 mg/L.

9. QUALITYCONTROL

9.1 Deionized water blanks are poured up weekly with the DWS samples. These serve as a check on the DI water system, and the bottle washing. A random sample of washed bottles are checked with a conductivity meter and any reading above 1.0 µmho indicates that set of
bottles needs to be rinsed again. DI water blanks are also poured up for the Al collection. Blanks are taken into the field and treated as samples. Another check of the DI system is weekly measurements of the DI conductivity, when the NADP sample is measured. Any reading above 1.0 µmho indicates a dirty cartridge and the cation exchange cartridges are changed.

9.2 Stock solutions are made up or purchased yearly. Two aliquots are set aside in order to check the stock concentration if necessary.

9.3 QC concentrates from NSI are sent to the lab quarterly. They are analyzed for SO_4, Cl, NO_3, NH_4, PO_4, and TKN. A value within the 95% C.I. is considered acceptable. Samples are run in triplicate. X bar charts will be used for these results. See Standard Methods, 1989. Perkin- Elmer cation concentrate (Alternate Metals II) is used to check the Atomic Absorption Spectrophotometer. It is purchased yearly.

9.4 A standard curve is determined before every analysis with the Astoria. R squared must equal 0.98 or greater before samples are analyzed.

9.5 Daily QC checks are done with solutions made from the NSI concentrates. Acceptable range for each ion are based on 95% confidence limits.

9.6 Check limits of detection annually for all instruments.

9.7 Check calibration of balances twice a year.

9.8 When freezing samples, 3 DI blanks are frozen with the samples and analyzed with the samples.

10.1 Preparation

1. Make sure all reagents are freshly prepared or are within allowable holding times and are free of particulates.
2. Verify that the correct filters and flowcell are installed in the detector.
3. Make sure there are no loose fittings or connections, and inspect pump tubes for excessive wear.

10.2 Operation

1. Turn on all instrument modules and computer.
2. Place all reagent lines in startup solution (DI water with appropriate surfactant). Place sampler wash lines in wash solution. Latch pump platens.
3. After flow has stabilized, verify a uniform bubble pattern throughout the manifold.
4. Turn on heating bath controls if required and adjust temperature properly for analysis.
5. Run the FASPac II software, enter user name and password.
6. Select the appropriate configuration from the list box in the tool bar at the top of the main menu. If one doesn't exist, see Configuration Setup in the operations manual. Enter a name for the run.
7. Connect the program to the system, select System – Connect from the main menu or click on the Connection (joined buckle, located in toolbar) or Connection Status (unjoined buckle) icon.
8. Select Channels button to bring channel windows to top. Select Options – Display Signal All and Options – Zero Signal and observe baseline on startup solution. When baseline is stable, place all lines in their appropriate reagents and allow to stabilize. Observe baseline, check for noise or drift, and aspirate a high standard to verify response. Consult troubleshooting guidelines if needed. Zero signal again.
9. Select the Sample Table button in the toolbar to access the sample table. Sample table should start with a Synchronization (SYNC), or high standard, followed by blanks to readjust baseline (w, W), calibrants (C1, C2, C3 …), QC standard, blanks, unknowns, Check calibrant (CC1 or QC1), blanks, unknowns, etc. Check calibrants should be run periodically to verify the calibration, and blanks should be run periodically to readjust baseline.
10. To start the run select Run – Begin, or select the green "start" icon.
11. When the calibration peaks have been displayed, select View – Calibration (or calibration icon) to view the calibration curve
12. When the run is complete, select the Sample Run or Sample Report icon to view results. Select File – Print to print a report; select File – Export to export to an Excel file. Select the red "abort" icon to end run.

10.3 Shut Down

1. Short term shutdown (1-4 days): Place reagent lines in startup solution for 15 – 20 minutes. Use high pump speed for only short periods, as extended periods will cause premature pump tube wear. Unlatch platens. Caution: Serious pump tube damage will occur if platens remain latched with the pump power off. Cover and store reagents and calibrants as appropriate to prevent deterioration.
2. Long term shutdown (4 or more days): Place reagent lines in deionized water for 15 – 20 minutes. Remove reagent lines from water and pump air until the cartridge is dry. Unlatch platens.

10.4 General Guidelines for Troubleshooting

1. Isolate and define the problem.
   Categorize the problem or symptom as chemistry, hydraulic, or electronic.
2. Do not overlook the obvious.
3. Rule out operator induced errors.
4. Eliminate one variable at a time.
5. Document the solution.
6. Refer to the operation manual for further trouble shooting solutions.

11. PRECISIONANDBIAS

11.1 Single operator precision and bias were obtained from the analysis of quality control check samples. QC samples were obtained from NSI Solutions and were diluted according to manufactures directions.

12. References

Astoria2Analyzer:OperationManual, Astoria-Pacific International, Clackamus, Oregon, 97015-0830, USA.

FASPacII:FlowAnalyzerSoftwrePackage,Version2.12, Astoria-Pacific International, Clackamus, Oregon, 97015-0830, USA.

FASPacIIQuickStart, Astoria-Pacific International, Clackamus, Oregon, 97015-0830, USA.

Table 1 - Method Detection Limits

Lab Designation	Method	Instrument	Instrument in Operation	Units of reported values	mdl 2016 matrix=DI	2015 DI mdl	2014 DI mdl	2013 DI	2012 mdl matrix H2O	MATRIX = H2O,2011 mdl	MATRIX = H2O,2010 mdl	Matrix = H2O, 2007 mdl
SiO2	Ammonium Molybdate reaction and reduction	Astoria 2 Autoanalyzer, Astoria-Pacific, Astoria, Astoria,	11/24/15/ 11/14/06	mg/L	0.001	0.002/ .002	0.002	0.002	0.002	0.001	0.004	0.007

Table 2: Recommended Sample Tray/Table Layout

Sample # Rack Position	Contents	Function	FASPac ID
1 SR:1	80 – 100 % Standard	Synchronization	SYNC
2 SR:2	Blank	Calculate Carryover	CO
3 SR:3	Blank	Wash	w
4 SR:4	Blank	Readjust baseline	W
5 SR:5	Standard 1	Calibration	C1
6 SR:6	Standard 2	Calibration	C2
7 SR:7	Standard 3	Calibration	C3
8 SR:8	Standard 4	Calibration	C4
9 SR:9	Standard 5	Calibration	C5
10 SR:10	Standard 6	Calibration	C6
11 SR:11	QC Standard	Verify calibration	QC1
12 SR:12	Blank	Wash	w
13 SR:13	Blank	Readjust baseline	W
14-24 1:1 – 1:10	Samples (unknowns)		
25 1:11	Check Calibrant	Verify calibration	CCV
26 1:12	Blank	Readjust baseline	W
27-37 1:13 – 1:22	Samples (unknowns		
38 1:23	Check Calibrant	Verify calibration	CCV
39 1:24	Blank	Readjust baseline	W
40 1:25	Blank	Pause sampler	PAUSE

Table 3: Example of Sampler Setup Window (Astoria *FASPac*)

Timing		■ Enable Autowash	
Sample Time	25	Autowash Interval	10
Wash Time	35		
Repetition Counts			
Unknowns	1		
Autowash	2		
Calibrants	2		

Table 4: Example of Channel Properties – Calibration Window (Astoria *FASPac*)

Calculate Concentrations From		Concentrations	
◘ Curves before		C1	0.000
Curves around		C2	0.010
Average all curves		C3	0.050
		C4	0.100
Curve Type		C5	0.200
1st Order Polynomial ▼ (drop down)		C6	0.600
Curve 1	Curve 2	C7	1.000

Figure 1

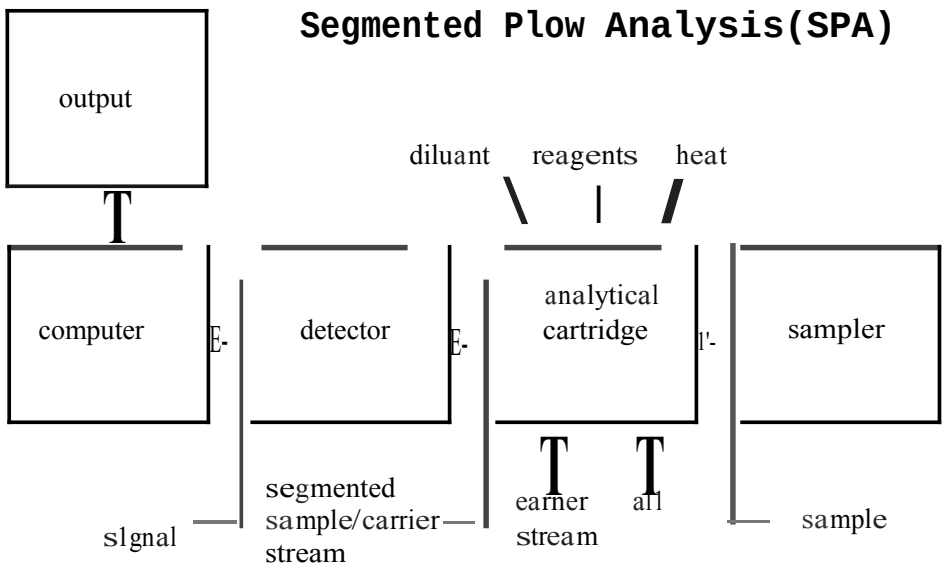
Segmented Plow Analysis(SPA)
output
diluant
reagents
heat
computer
detector
analytical cartridge
sampler
segmented sample/carrier stream
earner stream
sample

Figure 2

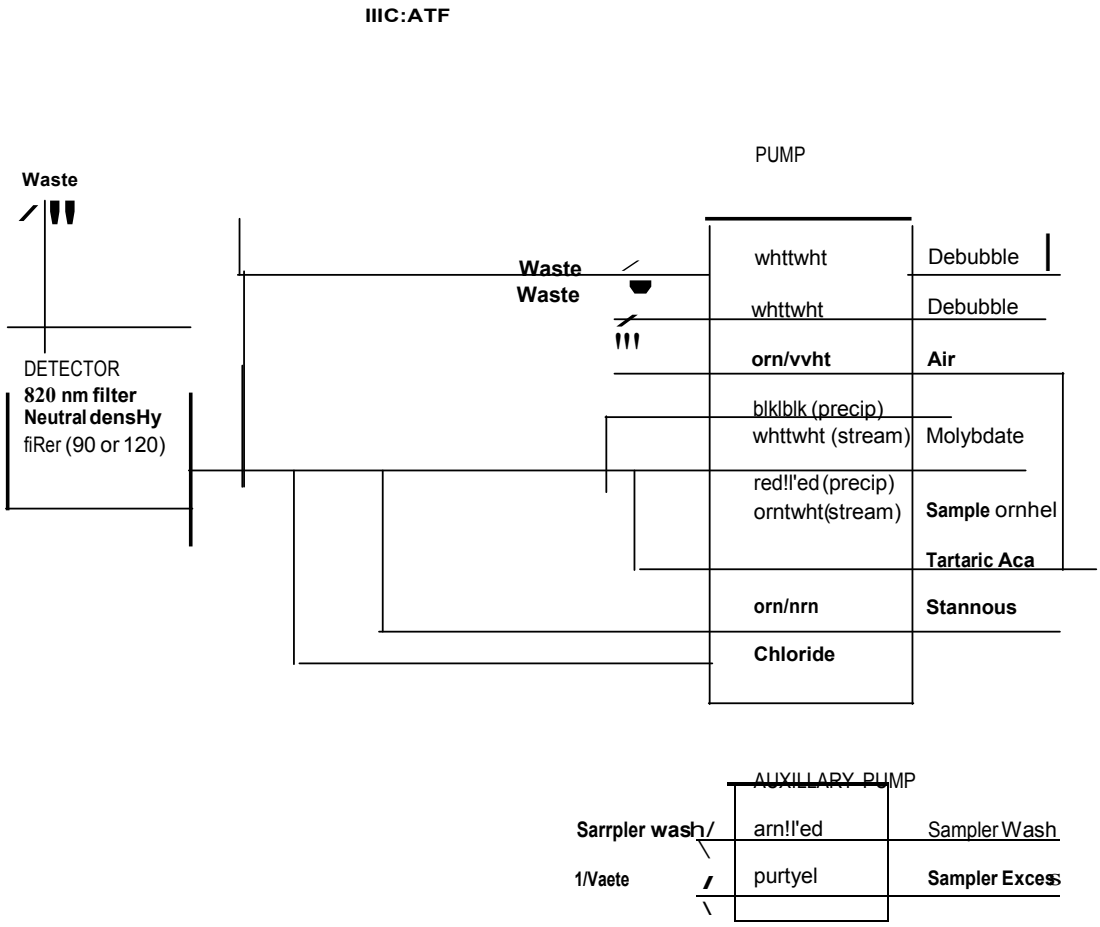
IIIC:ATF
PUMP
Waste
Waste
Waste
whttwht
Debubble
whttwht
Debubble
orn/vvht
Air
DETECTOR
820 nm filter
Neutral densHy
fiRer (90 or 120)
blklblk (precip)
whttwht (stream)
Molybdate
red!l'ed (precip)
orntwht(stream)
Sample ornhel
Tartaric Aca
orn/nrn
Stannous
Chloride
AUXILLARY PUMP
Sarrpler wash
arn!l'ed
Sampler Wash
1/Vaete
purtyel
Sampler Excess

Electrometric Determination of pH and Titration for Bicarbonate

February 2015

Coweeta Hydrologic Lab
3160 Coweeta Lab Road
Otto, N.C. 28763

Sponsoring Agency:

U.S. Forest Service
University of Georgia

Chelcy Miniat, Project Leader

Laboratory Manager:

Cindi Brown

Chemist:

Cindi Brown

Laboratory Technician:

Carol Holland
Sheila Gregory

INDEX

Section Number	Subject
01	Scope and Application
02	Summary of Method
03	Definitions
04	Interferences
05	Safety
06	Apparatus and Equipment
07	Reagents and Consumable Materials
08	Standardization of Sulfuric acid
09	Quality Control
10	Procedure and Calculations
11	Precision and Bias
12	References

TABLES

1. Suggested Calibration Standards for Samples at Coweeta.
2. Single-Operator Precision and Bias for pH determined from Quality Control Samples.
3. Single-Operator Precision and Bias for HCO_3determined from Quality Control Samples.

FIGURES

1. System diagram for pH meter and Brinkman Dosimat dispenser.

1. SCOPEANDAPPLICATION

1.1 This method is applicable to the determination of Hydrogen ions and Bicarbonates in Stream, Precipitation, Thrufall, and Lysimeter samples.

1.2 Method detection limits are summarized in Table 1.

1.3 The Bicarbonate titration method is not recommended for samples with pH values lower than 4.50.

2. SUMMARYOFMETHOD

2.1 The pH value is determined by the measurement of the activity of the Hydrogen ion in an aqueous solution. The electromotive force produced by the combination electrode varies linearly with pH. The linear relationship is described by calibration with pH 4 and pH 7 buffers.

3. DEFINITIONS

3.1 pH -- negative log of the activity of the Hydrogen ion.

3.2 ELECTRODE -- a probe when immersed into a liquid produces an electromotive force.

3.3 BUFFER -- solutions of a known pH used to calibrate pH meter.

3.4 BICARBONATE -- HCO_3 represents the buffering capacity of the sample.

4. INTERFERENCES

4.1 Temperature can influence the electrode performance. Avoid excessive drift by warming samples to room temperature prior to analysis.

4.2 Stirring the sample can speed electrode response but avoid taking the reading until the sample returns to a quiescent state.

5. SAFETY

5.1 Prepare .01N H_2SO_4 under fume hood. Wear lab coat, gloves, and safety glasses.

6. APPARATUSANDEQUIPMENT

6.1 pH Meter: Orion model 611
Meter should be readable to .01 pH units. Meter should have controls for calibration and slope adjustments. Temperature compensation is also a desirable feature.

6.2 Combination Electrode: Broadley - James #E-1229-EC2-A03SC
Probe should respond rapidly 1-3 minutes.

6.3 Automatic buret: Brinkmann Dosimat model 645
Dispenser should be accurate to .01mL.

6.4 Stopwatch

7. REAGENTSANDCONSUMABLEMATERIALS

Prepare all reagents in CO_2 free DI water.

7.1 pH buffer 4 and 7: Labcraft

Purchase buffers from commercial sources that are traceable to NIST standards.

7.2 Standardized 0.01N sulfuric acid. See section below.

7.3 Saturated KCl solution. Electrode requires periodic refill with KCl.

7.4 Storage solution for Orion series A meter electrode: Dissolve 1g of KCl into 200ml pH7 buffer.

8. STANDARDIZATIONOFSULFURICACID

8.1 Reagents:

a. 0.0100N potassium biphthalate: dissolve 2.0425 g anhydrous $KHC_8H_4O_4$ and dilute to l liter with CO_2-free DI water.
b. 1N NaOH: dissolve 40 g NaOH and dilute to 1 liter with DI water.
c. 0.01N NaOH: dilute 10.0 ml 1N NaOH with CO_2-free DI water to 1 liter. Make up and standardize weekly.
d. Phenolphthalein: dissolve 2.5 g phenolphthalein disodium salt in 250 ml DI water and 250 ml ETOH.
e. Stock sulfuric acid, 0.1N: 2.8 ml of concentrated H_2SO_4 diluted to 1 liter DI water.
f. CO_2-free DI water: prepare fresh as needed by boiling DI water for 15 minutes and cooling rapidly to room temperature. Cap the flask with an inverted beaker while cooling.
g. Sulfuric acid, 0.01N: dilute 100 ml of 0.1N stock to 1 liter with CO_2-free DI water. Make up weekly.
h. 0.1N sodium thiosulfate: dissolve 25 g $Na_2S_2O_35H_2O$ in 1 liter DI water.
i. Mixed bromcresol green-methyl red: dissolve 20 mg methyl red sodium salt and 100 mg bromcresol green sodium salt in 100 ml DI water.

8.2 Standardize the 0.01N sodium hydroxide

a. use 25 ml of .01N $KHC_8H_4O_4$ in flask
b. add 1 drop 0.1N sodium thiosulfate to the $KHC_8H_4O_4$
c. add 3 drops phenolphthalein
d. titrate with ~.01N NaOH until get faint pink (pH of 8.3)
e. repeat two more times
f. normality of NaOH = $\frac{\text{ml } KHC_8H_4O_4 \text{ x Normality of } KHC_8H_4O_4}{\text{ml NaOH}}$

8.3 Standardize the 0.01N sulfuric acid against NaOH of known concentration (approximately 0.01N, see above).

g. use 25 ml of 0.01N NaOH
h. add 1 drop 0.1N sodium thiosulfate
i. add 3 drops mixed bromcresol green-methyl red indicator
j. titrate with ~ 0.01N sulfuric acid until solution turns pale orange. Solution will go from blue to gray to pale orange.
k. repeat two more times
l. normality of H_2SO_4 = $\frac{\text{mlNaOHxNofNaOH}}{\text{ml } H_2SO_4}$

9. QUALITYCONTROL

9.1 Calibration buffers should be certified.

9.2 Calibrate pH meter each day.

9.3 Check ERA quality control mineral sample quarterly.

9.4 Remake and standardize the .01N H_2SO_4 acid every two weeks.

10. PROCEDUREANDCALCULATIONS

10.1 Samples and buffers should be at room temperature. (20° - 25° C)

10.2 Raise electrode and remove the storage bottle from tip.

10.3 Calibration:Orion Star A211

1. Turn on instrument and press calibrate.
2. Rinse electrode with DI water using wash bottle. Blot off excess water with lint free cloth.
3. Pour pH 7 buffer into a small beaker and lower the probe into the solution. Press start.
4. When ready is displayed, accept or edit.
5. Press next.
6. Rinse electrode with DI water using wash bottle. Blot off excess water with lint free cloth.
7. Pour pH 4 buffer into a small beaker and lower the probe into the solution. Press start.
8. When ready is displayed, accept or edit. Then press calibration done and measure.

For Soil pH use the Orion Star meter and follow the manual directions for calibrating.

10.4 Sample run:

1. Turn power on to Brinkman Dosimat and fill the syringe supply.
2. Dispense 2 - 3 ml of acid to clear any air that may be trapped.
3. Rinse electrode with DI water using wash bottle. Shake or blot off excess water.
4. Measure 25 ml of sample and pour into small beaker.
5. Lower electrode into sample and allow to stabilize for 2 minutes.
6. Record pH.
7. Record beginning number (ml) on the Brinkman Dosimat.
8. Slowly dispense acid into sample stopping to swirl occasionally.
9. Observe pH and stop adding acid when pH reads 4.50.
10. Record ending number on the Brinkman Dosimat.

10.5 Calculations: Bicarbonate mg/l

1. Bicarbonate is determined by electrometric titration with 0.01N H_2SO_4 to pH 4.5.

Calculations for HCO_3- are as follows:

$$\text{mg/L Alk. (as } CaCO_3) = \frac{(4.5\text{x}10\text{-}7)(\text{total alkalinity})}{H+ + (4.5\text{x}10\text{-}7)}$$

$$\text{Where Total Alkalinity} = \text{mg/l } CaCO3 = \frac{((\text{volume of titrant used to pH 4.5}) \text{ x N of } H2SO4 \text{ x } 50{,}000)^*}{\text{ml of sample}}$$

*and 50,000 = (1moleCaCO3/2eq)(100gCaCO3/ moleCaCO3)(1000mg/g)=mg/eq

The hydrogen ion concentration is calculated from the original sample pH.
Samples are analyzed the day of collection.

10.6 Shutdown:

1. Rinse electrode with DI water using wash bottle. Shake or blot off excess water.
2. Place storage bottle containing KCl on the tip of electrode.
3. Turn pH meter to Standby.
4. Turn power off to Brinkmann Dosimat.

10.7 Trouble shooting:

1. If the electrode responds erratically it may need filling with KCl.
2. If the electrode has a sluggish response then the junction may be clogged.
3. The Dosimat often gets air in the lines. Allow it to dispense 2 - 3 ml of acid before starting the first titration.

11. PRECISIONANDBIAS

11.1 Single operator precision and bias were obtained from the analysis of quality control check samples. Table 3 summarizes the data.

12. REFERENCES

12.1 MethodsforChemicalAnalysisofWaterandWaste, Method 150.1, EPA, 1983.

12.2 MethodsforChemicalAnalysisofWaterandWaste, Method 310.1, EPA, 1983

12.3 StandardMethodsfortheExaminationofWaterandWastewater, Method 423, "Determination of pH", 16th edition, 1985.

12.4 StandardMethodsfortheExaminationofWaterandWastewater, Method 403, "Determination of Alkalinity", 16th edition, 1985.

Table 1. Suggested Calibration Standards for Samples at Coweeta

Analyte	Calibration Standards
pH	4.00 and 7.00

Table 2. Single Operator Precision and Bias for pH determined from Quality Control Samples

Analyte	True Value	Number of Samples	Mean Measured	Mean Bias	Standard Deviation	Relative Standard Deviation, %
pH	9.08	10	9.12	.04	.01	.11

Relative Standard Deviation: 100 X (Sample Standard Deviation/Mean Value)

Method Detection Limit

Analyte	Lab Designation	Method	Instrument	Instrument in Operation	Units of reported values	2016 mdl	2015 mdl	2014 mdl
Hyrdrogen ion activity in in water	pH for soil	Standard Methods using an Orion 9165BN combination pH electrode	Thermoscientific Orion 3 star pH benchtop	August 2009	pH units	0.00	0.02	0.02
Hyrdrogen ion activity in in water	pH for Water		Digital pH/millivolt 611 meter, Thermo Fisher Scientific,	1985-July 2015	pH units		0.04	0.00
Hyrdrogen ion activity in in water	pH for Water		Thermoscientific Orion A211 pH benchtop	Sept 2015	pH units	0.01	0.02	

Figure 1. Brinkmann Dosimat model 645

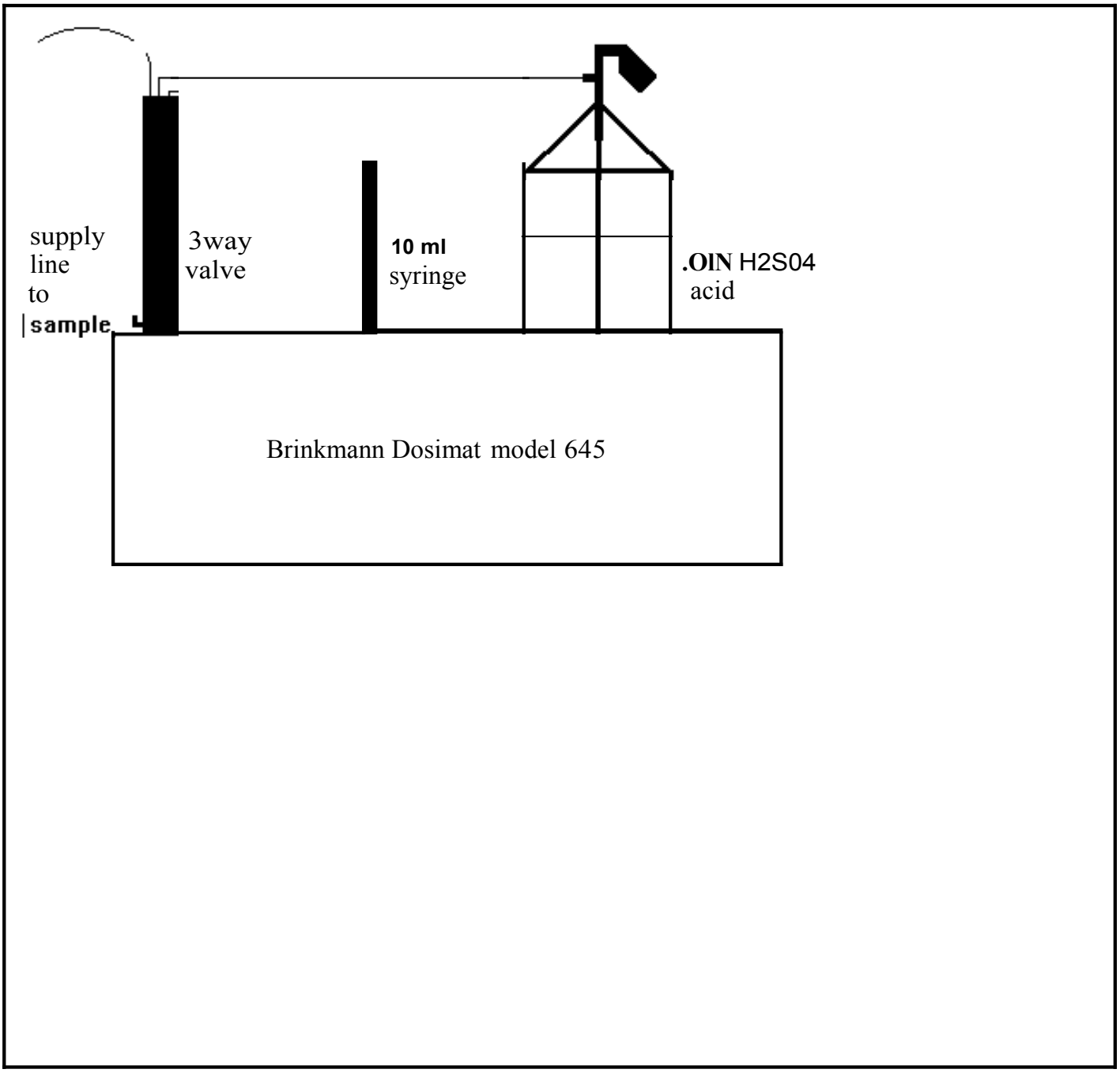

Inductively Coupled Plasma Spectroscopy

Determination of
Potassium, Sodium, Calcium, Magnesium,
Aluminum, Sulfur and Phosphorous

November 2012

Coweeta Hydrologic Lab
3160 Coweeta Lab Road
Otto, N.C. 28763

Sponsoring Agency:

U.S. Forest Service
University of Georgia

Chelcy Miniat, Project Leader

Laboratory Manager:

Cindi Brown

Chemist:

Cindi Brown

Laboratory Technician:

Carol Harper
Sheila Gregory

INDEX

Number	Subject
01	Scope and Application
02	Summary of Method
03	Interference's
04	Range
05	Apparatus and Equipment
06	Safety
07	Requirements
08	Reagents
09	Standards
10	Procedure
11	Quality Control
12	Washing Procedure for Glassware and Centrifuge Tubes
13	References

TABLES

1.	Method Detection Limits

Inductively Coupled Plasma Spectroscopy

1. SCOPE AND APPLICATION

1.1 This method is applicable for the determination of K, Na, Mg, Ca, Al and P in sample matrices of water, 2% nitric acid, 0.5M HCl, and soil extract (See cation soil procedure).

2. SUMMARY OF METHOD

Inductively Coupled Plasma (ICP) Spectroscopy utilizes a high energy plasma not only to dissociate the sample but excite and ionize the atoms for atomic and ionic emission. The light emitted is focused onto a diffraction grating via a slit and a mirror. As the grating rotates a different wavelength is focused onto a second mirror and the exit slit. The light is then directed to a Charge Injection Device where the signal is amplified to a measurable amount. A calibration curve is developed for each element plotting intensity versus concentration.

3. INTERFERENCES

ICP was developed to eliminate interferences encountered using Atomic Absorption. However there are usually more than one wavelength associated with each element and some wavelengths from different elements can overlap and interfere. Therefore a profile must be developed for each line and background correction applied if necessary.

4. RANGE

K, Na, Ca, Mg, Al and P all have a working range up to 1000ppm.

5. APPARATUS AND EQUIPMENT

5.1 Thermo Scientific iCAP 6300 Inductivity Coupled Plasma – Optical Emission Spectrometer

5.2 CETAC ASX-520 autosampler

5.3 Thermo Scientific ThermoFlex 900 water recirculating chiller

6. SAFETY

6.1 Never look directly at the plasma.

6.2 The exhaust must be on.

6.3 Follow all safety practices provided by the manufacture. Do not disable the safety interlocks!

7. REQUIREMENTS

7.1 Gases
Liquid Argon

7.2 Water recirculating chiller

8. REAGENTS

8.1 All calibrants and QC's are made in the same matrix of the samples being analyzed. Trace metal acids are used when needed.

8.2 1000ppm Yttrium for setting the nebulizer pressure and as an internal standard is purchased from Fisher Scientific.

8.3 ICP Instrument Check 1, cat# JYICP-QC1 purchased from Horiba, is used to determine stability and LOD.

9.4 Aqua regia – Using trace metal acids make up a 3 to 1 HCl HNO3 solution under the hood using caution. Wear safety googles, gloves and lab coat.

9.5 2ppm Zinc purchased from Thermo Scientific cat# 430122821411.

9.6 Corrosion Inhibitor for the water chiller is purchased from Thermo Scientific.

9. STANDARDS AND CALIBRANTS

9.1 Calibrant – ICP custom mix #Q-5067 purchased from NSI Solutions Inc

9.2 QC calibration check -ICP custom mix #Q-5068 purchased from NSI Solutions Inc

9.3 Quarterly QC – Certified samples purchased from Environmental Resource Associates cat# ERA530.

10. PROCEDURE

10.1 Before turning on the instrument, open argon to purge the optical components.

10.2 After purging two hours, turn the instrument on.

10.3 Spectrometer Start Up – The following directions are brief. Before using the instrument read the manufactures instructions

a. Turn on computer.
b. Open iTEVA software.
c. For user name select admin.
d. Instrument will now connect to the PC.
e. In the iTEVA control center under applications, click on Analyst.
f. Select a Method should come up. Highlight the appropriate method and click OK.
g. After argon has purged the system for at least 2 hours, turn on chiller and exhaust.
h. Allow chiller to circulate for 3 minutes. Turn on plasma.

i. Go to sequence tab, at top click on Auto-Session, select new auto sampler.
j. New Automation Session will come up. Select the appropriate rack configuration, and then click on new. Fill out as required and click OK.
k. On left side of page, a new icon will come up (looks like an auto sampler). Right click on the icon and choose Auto-locate all. This fills in sample information.
l. On the top bar of the page click on auto sampler with lightning bolt icon. This will initialize the auto sampler.
m. Depress the green arrow to begin the analysis.
n. To view the progress of the analysis return to the analysis tab.
o. After the analysis right click on the sequence (method name located in the analysis tab) and choose export all samples. This will save the data in comma delimited format.
p. Turn off plasma, release platens, turn off chiller and exhaust.
q. Put the argon at a trickle using the plasma control page.

10.4 Maintenance

Consult the manufactures instructions in the manual for cleaning the torch, spray chamber and nebulizer. If the torch is replaced or moved must adjust the torch with zinc, See manual for further instructions.

11. QUALITY CONTROL

11.1 A three point (or more) calibration curve is generated at the start of the run. An R^2 value of 0.99 or greater must be obtained.

11.2 The calibration curve is checked using a certified standard.
An accuracy of ±10% and a precision of 2% or less are maintained.

11.3 During the run the instrument recalibrates as dictated in the method.

11.4 Quarterly checks on the instrument are made using Environmental Resource Associates and NSI Solutions Inc. certified QCs.

11.5 Methods
For Coweeta watershed samples, raingauge, weather station samples use weekly plus Al.
For Santee event samples use santee.

11.6 When freezing samples, 3 DI blanks are frozen with samples and analyzed with the samples.

12. REFERENCES

iCAP 6000 Series ICP-OES Spectrometer Customer Training/Maintenance Manual, 2005 Thermo Electron Corporation Stafford House, Boundry Way, Hernel Hampstead, HP27GE, United Kingdom.

Table 1 – Method Detection Limits in mg/L

Analyte	Lab Designation	Method	Instrument	Instrument in Operation	Units of reported values	2016 mdl matrix= DI	2015 mdl matrix= DI	2014 mdl matrix= DI	2013 matrix= DI	2012 mdl matrix= DI	2016 mdl matrix= DA	2015 matrix = DA	2014 matrix= DA	2013 matrix= DA
Potassium	K	Optical Emission	Thermo Fisher iCAP 6300, Madison WI	November 30,2012	mg/L	0.002	0.003	0.003	0.018	0.002				
Sodium	Na	Optical Emission	Thermo Fisher iCAP 6300, Madison WI	November 30,2012	mg/L	0.009	0.008	0.009	0.012	0.015				
Calcium	Ca	Optical Emission	Thermo Fisher iCAP 6300, Madison WI	November 30,2012	mg/L	0.016	0.056	0.012	0.025	0.002				
Magnesium	Mg	Optical Emission	Thermo Fisher iCAP 6300, Madison WI	November 30,2012	mg/L	0.004	0.004	0.003	0.008	0.002				
phosphorous	P	Optical Emission	Thermo Fisher iCAP 6300, Madison WI	November 30,2012	mg/L	0.003	0.002	0.001	0.008	0.002	0.004	0.005	0.004	0.005
Aluminum	Al	Optical Emission	Thermo Fisher iCAP 6300, Madison WI	November 30,2012	mg/L	0.005	0.006	0.005	0.009	0.002				

Analyte	Lab Designation	Method	Instrument	Instrument in Operation	Units of reported values	2016 mdl matrix= 1N NH4Cl	20151N NH4Cl high	2014 1N NH4Cl high	2013 1N NH4Cl high	2012 1N NH4Cl high	2016 2% HNO3	2015 2% HNO3	2014 matrix= 2% HNO3	2013 Matrix= 2% HNO3	2012 Matrix= 2% HNO3	2014 .5M H2SO4 mdl	2013 matrix= .5M HCl	2013 matrix= 1N NH4OAc
Potassium	K	Optical Emission	Thermo Fisher iCAP 6300, Madison WI	November 30,2012	mg/L	0.112	0.088	0.089	0.134	0.156	0.093	0.165	0.081	0.058	0.170	0.141	0.006	0.043
Sodium	Na	Optical Emission	Thermo Fisher iCAP 6300, Madison WI	November 30,2012	mg/L	0.085	0.084	0.056	0.085	0.063	0.020	0.042	0.009	0.043	0.064	0.082		
Calcium	Ca	Optical Emission	Thermo Fisher iCAP 6300, Madison WI	November 30,2012	mg/L	0.081	0.077	0.058	0.070	0.120	0.035	0.124	0.025	0.024	0.100	0.083	0.120	0.017
Magnesium	Mg	Optical Emission	Thermo Fisher iCAP 6300, Madison WI	November 30,2012	mg/L	0.071	0.047	0.029	0.058	0.090	0.021	0.035	0.009	0.043	0.048	0.081	0.010	0.065
phosphorous	P	Optical Emission	Thermo Fisher iCAP 6300, Madison WI	November 30,2012	mg/L						0.016	0.029	0.005	0.067	0.034	0.048	0.007	
Aluminum	Al	Optical Emission	Thermo Fisher iCAP 6300, Madison WI	November 30,2012	mg/L	0.063	0.062	0.048	0.235	0.507	0.022	0.039	0.017			0.089		

student t with nine degrees of freedom and a 99% confidence level = 2.821

Combustion Analysis of Water Samples for Dissolved Organic Carbon and Total Nitrogen

Coweeta Hydrologic Laboratory
3160 Coweeta Lab Road
Otto, N. C. 28763

February 2015

Sponsoring Agency:

U.S. Forest Service
University of Georgia

Chelcy Miniat, Project Leader

Laboratory Manager:

Cindi Brown

Chemist:

Cindi Brown

Laboratory Technicians:

Carol Harper
Sheila Gregory

INDEX

Section Number	Subject
01	Scope and Application
02	Summary of Method
03	Definitions
04	Interferences
05	Safety
06	Apparatus and Equipment
07	Consumable Materials
08	Reagents
09	Calibrants
10	Quality Control
11	Procedure
12	Precision and Bias
13	References

TABLES

1. Method Detection Limits.

FIGURES

1. System flow diagram for Shimadzu TOC-VCPH TNM-1 Analyzer.

1. SCOPEANDAPPLICATION

1.1 This method is applicable for the determination of Dissolved Organic Carbon and Total Nitrogen in filtered water samples.

1.2 Method detection limits are summarized in Table 1.

2. SUMMARYOFMETHOD

2.1 Dissolved organic carbon is measured by combustion technique and detection using a non-dispersal infrared detector. Inorganic carbon is removed by acidifying the sample and purging with carbon-free air. The remaining carbon is converted to carbon dioxide through oxidation by high temperature combustion. Carbon dioxide is measured by an infrared detector, using the region of infrared light specific to carbon dioxide.

Total nitrogen is measured by chemiluminescence, or emission of light as the result of a chemical reaction. The sample is combusted to nitrogen monoxide and nitrogen dioxide, which react with ozone to create an excited state in nitrogen dioxide. When electrons return to ground state, light energy is emitted; this energy is measured with a chemiluminescence detector

3. DEFINITIONS

3.1 Nondispersive Infrared (NDIR) sensors are simple spectroscopic devices often used for gas analysis.
The key components are an infrared source (lamp), a sample chamber or light tube, a wavelength filter, and an infrared detector. The gas is pumped or diffuses into the sample chamber, and gas concentration is measured electro-optically by its absorption of a specific wavelength in the infrared (IR).

3.2 Chemiluminescence is the generation of electromagnetic radiation as light by the release of energy from a chemical reaction

4. INTERFERENCES

None

5. SAFETY

5.1 Do not touch furnace surface when in use. Furnace is at a very high temperature.

5.2 See appendix IV, section 10 – Transporting and Using Gas Cylinders

5.3 See appendix IV, Section 1 – Use of Acids. Wear safety glasses, gloves and a lab coat.

5.4 Make sure to use proper gas regulators on the helium, air and oxygen tanks.

6. APPARATUSANDEQUIPMENT

6.1 Shimadzu TOC-VCPH TNM-1 analyzer

6.2 Shimadzu ASI-V autosampler

7. CONSUMABLEMATERIALS

7.1 Purchase from Shimadzu:

halogen scrubber	630-00992
CO2 absorber	630-00999
o-ring teflon	036-11408-84
o-ring black	0936-11209-84
Combustion tube	638-41323
Viton coupling	631-40316
o-ring, ozone treatment unit	036-19004-19
Gasket for TN detector entrance	631-43818-00
Plunger tip	638-59296-01
syringe	638-59296-00
Membrane filter	046-00044-11
union	631-40315-00
Pt catalyst	638-60116

8. REAGENTS

2N HCl - Add 300ml ultra pure DI to a 500ml volumetric flask. Working under the hood measure 83 ml of trace concentrated HCL (fisher cat# A508-500) in a graduated cylinder. Pour into volumetric containing DI. Swirl under the hood, pointing the open end away from you. Allow to cool. Fill to the mark with DI.

9. Rinse solution, zero water, dilution water

Note – Water picks up carbon from the atmosphere. Never use water left in a container (squirt bottle, flask, etc...). Always use fresh type I DI.

9.1 Rinse Solution – This solution is used to rinse the sample needle of the autosampler. Each day empty and refill the rinse water with type I DI.

9.2 Zero water – Used for injection checks and as a measure of how the instrument is functioning (note the shape of the peak and the peak area). Make weekly. Add 400 ml type I water to a 500ml volumetric flask which has been rinsed 3 times in type I DI water. Then add 12.5ml of 2N HCl. Fill to the mark with Type I DI.

9.3 Dilution water – Used to dilute calibrants and samples. Fill daily by emptying the container and then rinsing 3 times with type I DI water.

10. Calibrants, QC's, and QA's

Calibrants, QC's and QA's are made weekly using fresh Type I DI.

Note – Water picks up carbon from the atmosphere. Never use water left in a container (squirt bottle, flask, etc…). Always use fresh type I DI.

10ppm TC+TN calibrant – Weigh 2.5g of 1000ppm TOC from ERA plus 2.5g of 1000ppm NO_3-N from NSI into a 300ml muffled DOC bottle. Add type I DI to a mass of 243.75g. Add 6.25 ml of 2N HCl. Make weekly.

50ppm TC+TN calibrant – Weigh 12.5g of 1000ppm TOC from ERA plus 12.5g of 1000ppm NO_3-N from NSI into a 300ml muffled DOC bottle. Add type I DI to a mass of 243.75g. Add 6.25 ml of 2N HCl. Make monthly.

DOC QC control is made from the NSI quarterly (QCI-013) stock solution. Make weekly.

DOC QA control is purchased from a reputable outside source. Make weekly.

TN QC and TN QA controls are made using the simple nutrient stock purchased from NSI (QCI-138). Make weekly.

Check for carbon type being measured - To ensure the instrument is measuring organic carbon (acid is being added), an inorganic standard is added at the start of the analysis and the end of the analysis. The standard should show little to no carbon.

To prepare - Pipette 5ml of Hach Standard 2 Alkalinity cat#2826253 into a muffled 250ml DOC bottle. Add 245ml type I DI. This will give 1.2ppm inorganic carbon.

11. QUALITYCONTROL

1. Deionized water blanks are poured up weekly with the DWS sample. This sample is analyzed for all analytes measured for our stream chemistry and serves as a check on the DI water system, and the bottle washing. A random sample of washed bottles is checked with a conductivity meter. Any reading above 1.0 μmho indicates that set of bottles needs to be rinsed again. Blanks are taken into the field and treated as samples.
2. Stock solutions are purchased yearly.
3. Certified quality control (QC's) concentrates from NSI, ERA or other reputable companies are purchased quarterly for each analyte. They are analyzed at concentrations which reflect sample concentrations. The certified sample has a tolerance range for each analyte. These QC's are run in triplicate.
4. A standard curve is determined before every analysis each day. R squared must equal 0.99 or better before samples are analyzed.
5. The standard curves accuracy is checked using a certified QC sample. QC's are analyzed after a standard curve is generated, after every 10th sample and at the end of the run. If a QC fails, all samples from the failed QC up to the last good QC are re-analyzed.
6. Method detection limits (mdl's) are checked quarterly for every analyte, for every matrix, for each instrument.
7. All balances are certified yearly.
8. After an instrument has undergone major repair or has been shut down for over a month, quarterly QC's and mdl's are run and the analysis approved by the lab manager before samples can be analyzed.
9. Calibrants and QC's have the same shelf life as the sample unless acidified. Standards and QC's at high concentrations (1ppm or higher) can be used for the week.
10. See Coweeta Quality Assurance Protocol for further details.
11. When freezing samples, 3 DI blanks are frozen with the samples and analyzed with the the samples.
12. Ensure the instrument is adding acid to the samples by analyzing a known quantity of inorganic at the start and end of the analysis.

12. PROCEDURE

12.1 To start Analysis

1. Open zero air
2. Open compressed air
3. Turn on instrument by pressing power switch on TOC_V_{CPH} analyzer.
4. Open program by double clicking TOC-Control V icon on desktop of computer. Double click sample table editor. Click OK. On the top tool bar open a new analysis by clicking on the icon of white paper. Enter the days date, format ddmmyy.
5. Connect the instrument to the computer by clicking on connect located on the upper tool bar.

12.2 Prepare for Analysis

1. See section in Procedures for Water Analysis filtering sample for DOC.
2. Make sure there is organic free DI in the rinse reservoir (located in back of the instrument), the dilution bottle and the bottle of zero DI w/acid (both located between the instrument and sampler).
3. Ensure there are enough calibrant and QC's for the analysis.

12.3 Set up Analysis Sheet

1. Insert InjectionCkNPOC.cal calibration curve. This is to check the injection.
2. Insert Autogenerate
   a. For W S analysis use ws_10ppm_analysis_NPOC_TN.met
      1. Calibration curve
      Use 10NPOC_wTN.cal plus 10TN_0_1_wNPOC.cal
      2. Quality Control
      Use 10NPOCwTN.tpl plus 10TN_0_1_wNPOC.tpl
      3. Quality Assurance
      Use .5_QA_10ppmNPOC.tpl plus .05_QA_10ppmTN.tbl
   b. For Santee analysis use NewSantee.mth
      1. Calibration curve
      Use DOC50cal.cal plus newLG2TN10ppm.cal
      2. Quality Control
      Use DOCQC5.0_50cal.tbl plus .1QCTN2cal.tbl
   c. Quality Assurance
      Use DOCQA.5_50cal.tpl plus .05QATN2.tbl

All other sample analysis are assigned a calibration curve, quality control and quality assurance parameters by the laboratory manager.

12.4 Begin analysis by clicking the stop light icon, click on standby, click OK, and click start.

12.5 To shut down the instrument click on the clock icon, and click on standby. The instrument will shut down in 30 minutes.

Note: The stop sign icon will stop analysis after finishing current sample being analyzed. The stop sign with bulb flash will stop analyzing and abort the current sample.

13. PRECISIONANDBIAS

Single operator precision and bias were obtained from the analysis of NSI QC in DI. Table 1 summarizes the current data.

14. REFERENCES

ShimadzuTOC-VCPH/CPUsersManual, Shimadzu Corporation, 2003.

Table 1 Method Detection Limit for DOC and TN in mg/L

Analyte	Lab Designation	Method	Instrument	Instrument in Operation	Units of reported values	2016 MATRIX = H2O mdl	2015 MATRIX = H2O mdl	2014 MATRIX = H2O mdl	2013 MATRIX = H2O mdl	2012 MATRIX = H2O mdl	2011 MATRIX = H2O mdl	2010 MATRIX = H2O mdl	2007 MATRIX = H2O mdl
Dissolved organic carbon	DOC	catalytically-aided platinum 680°C combustion technique	Shimadzu DOC-VCPH TNM-1 analyzer, Shimadzu Scientific Instruments, Columbis, MD	November 2016/September 2015	mg/L	0.034/ 0.019	0.054	0.034	0.038	0.020	0.027	0.049	0.018
Total dissolved nitrogen	TDN	lumin-escense		November 2016/September 2015	mg/L	0.013/ 0.009	0.010	0.009	0.011	0.011	0.008	0.032	0.010

Figure 1- Flow Diagram for DOC Analysis

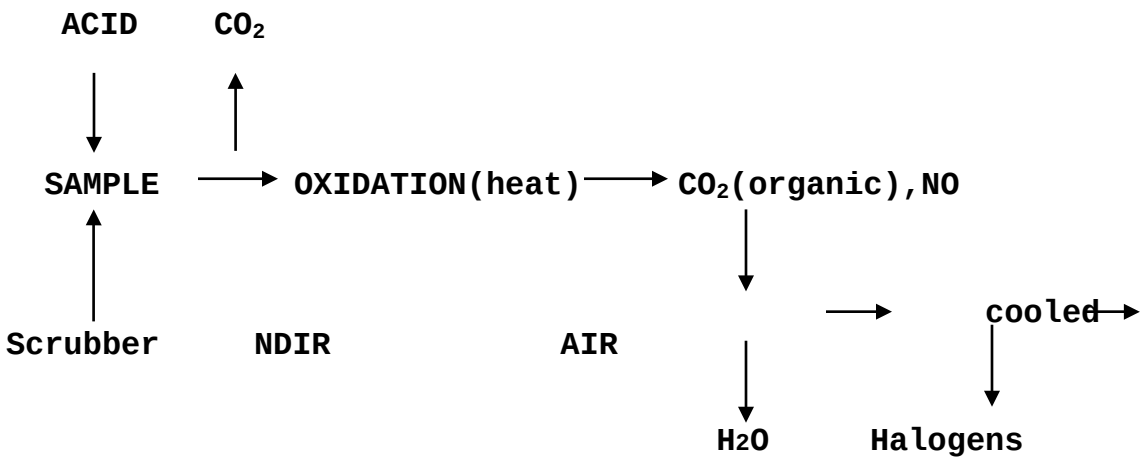

Flow Diagram for TN Analysis

NDIR (NO) ⟶ Chemiluminescence

$$NO + O3 \rightarrow NO_2 + O_2 \rightarrow NO_2^* + h\nu$$

Appendix 1. – Methods Archive

I. Digestion for Total Cations in Water

Equipment:

1. Scientific Block Digester Model AD-40
2. Digestion Tubes
3. Flume Hood
4. Oxford Pipet
5. Repipet Dispenser
6. Vortex Mixer
7. Boiling Chips - Teflon and Hengar
8. Parafilm

Reagents:

9. HNO_3, concentrated
10. H_2SO_4 concentrated
11. H_2O_2 30%

Procedure:

12. Measure 40 ml of sample into acid-washed TKN tube. Fill to mark on tube.
13. Add 2.5 ml H_2SO_4 and 2.5 ml HNO_3. Vortex.
14. Place on block digester at 105°C.
15. After 2-4 hours, remove and cool slightly. Then add 3 ml of H_2O_2 with plastic syringe, Vortex, Put back on block.
16. After 20 hours total time on block remove and refill tubes to mark with deionized water.
17. Follow same procedure for blanks (3) and standards.

Analysis:

Analyze K and Ca on AA using digested standards. Zero instrument with digested blanks. For Ca, add at least 0.2 ml of 5% LaO_2 solution to 5 ml of sample. The addition of the same amount of 5% NaCl may be helpful in suppressing ionization.

II. Total Phosphorus in Soil and Sediment Samples

Equipment:

1. 70 ml Pyrex screw capped culture tubes with teflon lined caps (Corning 9826-25x).
2. Pressure cooker (sterilizer).
3. Pipette.
4. Vortex mixer.

Reagents:

5. Potassium Persulfate $K_2S_2O_8$
6. Sulfuric Acid H_2SO_4
7. Potassium Sulfate K_2SO_4
8. Phosphorus standard 2.0 mg/l

Procedures:

1. Acid wash tubes with 10% HCl - rinse with DI water.
2. Prepare soil - dry and sieve (2mm)
3. Prepare 5.5 M H_2SO_4 solution. (29.5ml/100ml)
4. Prepare 8.0 M H_2SO_4 solution. (42.8ml/100ml)
5. Prepare K_2SO_4-H_2SO_4 solution. (7.36g K_2SO_4 + 25.0ml 8.0M H_2SO_4 per liter).
6. Weigh 10mg-50mg soil into each tube.
7. Be sure to include a QC check sample. (NIST estuary)
8. Dispense 1.0 ml DI water and 1.0 ml 5.5 M H_2SO_4 into the sample and 3 blanks.
9. Weigh .400 g $K_2S_2O_8$ into the tubes.
10. Cap tightly and pressure cook (8-9psi) for 1 hour at 130°C.
11. Allow to cool then add 33.0 ml DI water to samples and two blanks.
12. Add 28.0 ml of DI water and 5.0 ml of the 2.0 mg/l phosphorus standard to two tubes.
13. Add 23.0 ml of DI water and 10.0 ml of the 2.0 mg/l phosphorus standard to two tubes.
14. Mix on vortex mixer and allow particulate material to settle, preferably overnight.
15. Dilute 5.0 ml of the supernatant solution in each tube to 50.0 ml using K_2SO_4-H_2SO_4 solution.
16. The diluted standards in the last 6 tubes will yield concentrations of 0.0 mg/l, 0.029 mg/l, and 0.057 mg/l of phosphorus.

Analysis:

Analyze on Perstorp system as Phosphorus using digested standards and blanks for calibration.

III. Centrifuging Whole and Filtrate Samples for TKN Analysis

The purpose of centrifuging these samples is to obtain a sub-sample free of suspended material. The TKN value of this sample will be subtracted from the TKN value of its non-centrifuged component to obtain the TKN value for the suspended material.

A. Shake the monthly composite thoroughly.
B. Immediately pour up 60 ml into a labeled 125 ml bottle. This will be the whole (W) sample. Shake again and pour composite into 3 or 4 centrifuge tubes; keep a list of which tubes represent which sample.
C. Centrifuge for 10 minutes at 15,000 rpm.
D. Pour supernatant (clear liquid at top) into another labeled bottle. Do not pour over the material which has collected on the outer side of the tube. Do not pour out any liquid from the bottom of the tube which may have particles in it. This is the filtered (F) sample.
E. Save the rest of the composite for turbidity.

IV. Kjeldahl Digestion for Water Samples

Wear safety glasses, lab coat, and gloves when performing this procedure.

Equipment:

1. Scientific Block Digester Model AD-40
2. Digestion Tubes
3. Flume Hood
4. Oxford Pipette
5. Repipet Dispenser
6. Vortex Mixer
7. Boiling Chips - Teflon and Hengar
8. Parafilm

Reagents:

1. Mercuric Sulfate (1)
   a. Dissolve 8g of HgO_2 in 50 ml of warm 1:4 H_2SO_4
   b. Dilute to 100 ml with DI water
2. Potassium Sulfate (2)
   a. Dissolve 133g K_2SO_4 in 700 ml DI water
   b. Add 200 ml of H_2SO_4 acid
3. Working Digestion Solution
   a. Add 25 ml of solution 1 to solution 2
   b. Dilute to 1 liter

Procedure:

1. Turn on fume hood and block digester on and set to 160°C, allow 1 hour to warm up.
2. Prepare tubes - number and place 3 teflon and 1 hangar chips in each tube
3. Pipette 30 ml of sample into tubes - allow 8 tubes for standards and 3 tubes for blanks, 3 tubes for QCs and 26 for unknowns. Total = 40.
4. Pipette 6 ml of Digestion solution into each tube and vortex
5. Place tubes into block using the digester stand and side plates
6. Set block controller to run 1 hour at 160°C and 2 1/2 hours at 380°C and press start
7. When digestion cycle is complete, remove digester stand and tubes from block and allow to cool inside the hood for 15 to 20 min.
8. Dilute each tube with 30 ml of H_2O and vortex
9. Cover each tube with parafilm and refrigerate until analysis

Calculation of Percent TKN in Particulates

$$\%TKN = \frac{(w-f)}{(turb)} \times 100$$

w= whole concentration mg/l
f= filtrate concentration mg/l
turb= turbidity mg/l

V. Compositing Lysimeters and Well Samples

The following samples will be composited monthly for chemical analysis:

Riparian Lysimeters
Gradient Lysimeters
Restoration Study Lysimeters
Riparian Well Samples
Slagle Restoration Lysimeter

Samples will composited on a volume weighted basis. Each week's collection volume is calculated as a percentage of the total volume. A composite of 250 ml is made using these representative percentage calculations. Example:

Lysimeter 118-1s

	Volume ml	Percentage of total	Amount needed for composite
	150	21	53.6
	200	29	71.4
	100	14	35.7
	250	36	89.3
Total =	700	100	250

VI. Compositing Restoration Overland Flow Samples

Overland Flow samples are also composited on a volume weighted basis. Volumes are calculated using a depth measurement from each collector. When sampling the collection carboys in the field, be

sure to stir well to ensure a homogeneous subsample. Composite samples will be analyzed for total solids, total carbon, and total nitrogen prior to any other analysis. Refer to section VIII for instructions on total solids. Refer to instrumental section on Elemental Analysis of Total Carbon, Hydrogen, and Nitrogen in Soil and Plant Tissue Samples for instructions for analysis of total carbon and total nitrogen on the filters.

VII. Speciation of Stream and Soil Solution Aluminum

This procedure is for the fractionation of dissolved Al into the organically-complexed and the ionic plus inorganically-complexed fraction of monomeric Al.

Equipment:

1. Pipettes (eppendorf and glass pasteur)
2. Peristaltic pump (Masterflex)
3. Powder free gloves
4. 250 ml plastic bottles
5. 30 ml plastic bottles
6. 15 ml plastic centrifuge tubes (polyethylene)
7. 3 ml plastic centrifuge tubes with caps
8. 1.5 ml plastic centrifuge tubes with caps
9. Custom make reaction column (see below)

Stock Reagents: (ACS grade)

10. MIBK (methyl isobutyl ketone)
11. Glacial Acetic Acid (CH_3COOH)
12. Nitric Acid (HNO_3) - trace metal grade
13. 8-Hydroxyquinoline (HOC_6H_3N:CHCH:CH)
14. Ammonium Hydroxide (NH_4OH)
15. Sodium Chloride (NaCl)
16. Rexyn-101 cation exchange resin beads (Fisher Scientific)

Working Reagents:

1. 1% 8-Hydroxyquinoline in 10% glacial acetic acid (100 ml)
   a. Dissolve 1g 8-Hydroxyquinoline in 10 ml glacial acetic acid then dilute to 100 ml with DI water.
2. 10M metal free Ammonium Hydroxide (200 ml)
   a. Add 135.2 ml of NH_4OH to 64.8 ml of DI water.
3. NH_4AC Buffer (500 ml)
   a. Add 111.5 ml of 10M HN_4OH and 57.5 ml of glacial acetic acid to 250 ml of DI water, Adjust pH to 8.3 and dilute to 500 ml with DI water. CAUTION! - will give off fumes and heat. Check pH before using. Usually takes 3-5 ml of acid to bring pH down to 8.3.
4. 0.1M NaCl (1000 ml)
   a. Dissolve 5.844g NaCl in 900 ml of DI water and dilute to 1 liter.
5. 0.001M NaCl (1000 ml)
   a. Dilute 10 ml of 0.1M NaCl to 1 liter with DI water.
6. 1N HNO_3 (1000 ml)

a. Add 64.0 ml of HNO_3 acid to 800 ml of DI water and dilute to 1 liter.

Procedure:

1. MIBK extraction
   a. Make ready MIBK, 1% 8-Hydroxyquinoline and NH_4AC buffer (ph 8.3).
   b. Make ready 1 ml and 4 ml pipettes with acid washed tips.
   c. Label 15 ml centrifuge tubes with sample IDs, standards, and blanks.
   d. Pipette 1 ml NH_4AC into a tube.
   e. Pipette 4 ml of sample into the tube.
   f. Immediately add 1 ml of 1% 8-Hydroxyquinoline to tube.
   g. Immediately forcibly pipette 4 ml of sample into tube.

h. Immediately add 2 ml MIBK, cap and shake tube for 10 sec.
i. Allow to stand for 2 to 3 hours.
j. Proceed with HNO_3 extraction.

2. CEC extraction
   a. Make ready peristaltic pump set at 13 ml per min.
   b. Make ready custom CEC extraction column.
      (1) Cut a 17 cm piece of 6 mm ID hard polypropylene tubing.
      (2) Attach 4 cm length of 9 mm OD flexible tubing to each end.
      (3) Attach pipette tip to bottom end of column.
      (4) Place 3 cm of glass wool in one end of tube.
      (5) Fill column with DI water and add Rexyn-101 cation exchange resin beads. Get as much trapped air out of the column as possible.
      (6) Connect an empty 60cc syringe to the top of the tube. This will act as a reservoir as the pump draws liquid through the column.
      (7) Support column and reservoir with ring stand and connect tubing to pump. Make sure pump is set at correct speed and direction.
      (8) Pretreat column by pumping through 200-300 ml of 0.1M NaCl. Check stability of column pH by pumping 0.001M NaCl through column. Column should be in the pH range of samples.
   c. Rinse column with 50 ml of 0.001M NaCl.
   d. Pour in 50 ml of sample. Let first 20 ml go to waste. Save last 30 ml.
   e. Rinse column with 50 ml of 0.001M NaCl.
   f. Use 8 ml of the saved sample for MIBK extraction. The rest may be analyzed later.

3. HNO_3 extraction
   a. Set eppendorf pipet to .666 ml and use acid-washed tips.
   b. Pipet 2 aliquots of .666 ml each into labeled 3 ml centrifuge tubes.
   c. Add .666 ml of 1N HNO_3 to the tube.
   d. Cap tightly and put on shaker for 20 minutes.
   e. Stand tubes upright for a few minutes, then using small pasteur pipet withdraw ~ .30 ml of yellow liquid from the very bottom of each tube.
   f. Place extractant into a labeled 1.5 ml centrifuge tube.

Analysis:
1. Samples can be stored in freezer until analyzed on graphite furnace.
2. Refer to section on Atomic Absorption Spectrophotometer - Part II

VIII. Procedure for washing IC vials and caps: initiated 12/6/12 and retired once the IC2500 was retired

START WITH SINK IN THE SOILS LAB

Remove vial caps from vial using a hemostat. Empty any liquid left in vial into the sink.

1. Vials
   a. In the soils lab soak vials in 10% HCl for 2 hours (can be overnight) in the acid only tub.
   b. Remove vials from acid and place in acid only tub for DI soak. Fill with DI. Soak in DI overnight.
   c. Drain DI out of tub. Bring tub to IC lab and fill tub with DI.
   d. While vials in DI, grab a handful of vials out of the tub and rinse 4 times in DI and then place on racks.
2. Vial caps
   a. In the soils lab soak vial caps in 10% HCl for 2 hours (can be overnight) in the acid only tub.
   b. Remove the caps from acid and place in acid only tub for DI soak. Fill with DI. Soak in DI overnight.
   c. Drain DI out of tub. Bring tub to IC lab and fill tub with DI.
   d. Drain the tub and fill with DI again. Repeat for a total of 4 times.
   e. Place vial caps in colander to dry.

Note: Always start with empty carboy. Do not use DI left in carboy overnight.

Appendix II – Instrumentation Methods No Longer in Use

Methane and Carbon Dioxide Gas Analysis by
Gas Chromatography

December 1995

Coweeta Hydrologic Lab
3160 Coweeta Lab Road
Otto, N.C. 28763

Sponsoring Agency: James M.

Vose, Project Leader U.S.

Forest Service
University of Georgia

Laboratory Manager:

James M. Deal

Chemist:

Cindi Brown

Laboratory Technician:

Carol Holland

INDEX

Section Number	Subject
01	Scope and Application
02	Summary of Method
03	Equipment
04	Safety
05	Standards
06	Requirements
07	Instrument Conditions
08	Procedure
09	Quality Control
10	Maintenance

FIGURES

1. Diagram for 10 Port Injection Valve

GASCHROMATOGRAPHY

1. SCOPEANDAPPLICATION

1.1 This method is applicable for the determination of CH_4 and CO_2 in atmospheric samples.

2. SUMMARYOFMETHOD

2.1 Gas Chromatography utilizes the attractive forces between the sample effluent and the stationary phase of the column to separate the components in the sample. The more the sample is like the column the longer the species will be retained. The components are detected by a selected detector. The components can then be quantified using a standardization curve.

A sample is injected into a heated port and vaporized. The sample is carried onto the column and to the detector by the carrier gas. The carrier gas is an inert gas such as Helium or Nitrogen. The sample and carrier gas make up the mobile phase. Detector selection is dependent on the species of interest and the concentration of the species.

2.2 The Thermal Conductivity Detector (TCD) is a universal detector capable of detecting all compounds. Detection is limited by concentration with a range in the upper ppm. The TCD consist of four filaments which make up the arms of a Wheatstone bridge. The column effluent passes through one pair of filaments, the second pair is a reference with just helium passing through. The conductivity of helium is greater than most other compounds. Therefore, the presence of the sample causes the filament temperature of the sample side to rise creating an imbalance between the pair. This imbalance is measured and quantified.

2.3 The Flame Ionization Detector (FID) is used for detection of organic molecules. The FID has a detection limit in the upper ppb and low ppm range.

The FID measures changes in an applied voltage to detect ions formed. Ions are formed when the effluent stream moves up and into a jet with a H_2/air flame. The organic molecules present in the sample are then ionized. The ions accumulate in a collection cup located above the flame. This results in a change in voltage which is amplified and sent to the integrator.

3. EQUIPMENT

3.1 Varian Model 3700 Gas Chromatograph
The Varian is equipped with two detectors. A Thermal Conductivity Detector and a Flame Ionization Detector. Column capability is packed.

3.2 Spectra Physics Model SP4270 Integrator
The spectra Physics is connected to the Varian.

3.3 Syringe - BD 60cc
Needle - BD 25 gauge

4. SAFETY

4.1 All gas cylinder connections must be leak free.

5. STANDARDS

5.1 All gas standards are certified and in nitrogen.

6. REQUIREMENTS

6.1 Gases
a. Compressed Air - breathing grade, tank pressure = 60psi
b. H_2 - zero grade, tank pressure = 40psi
c. He - ultra high purity, tank pressure = 60psi

6.2 Column
a. FID - 80/100 mesh Hayesep Q _"x10ft
b. TCD - 80/100 mesh Hayesep Q _"x10ft

6.3 Sample valve
Valco 10 port sampling valve for FID/TCD. Schematic shown in Figure 1.

6.4 Sample Loop Volumes - Each = 1.2ml

6.5 Septa
a. Varian Injector
7/16" Blue Septa
Supplier - ALLTECH
CAT # 6518

b. Gas Sampling Valves
3/8" Grey Septa
Manufacturer - Unknown

6.6 Special Requirements
Because atmospheric samples contain moisture, which can damage the TCD (corrodes the filaments), a 4½"x¼" copper tube packed with silica gel (mesh size 6-16) using glass wool to plug is placed before the sample loops and after the injection port.

7. INSTRUMENTCONDITIONS

7.1 a. Injector - off
b. Oven - 40°C
c. Detector
1. FID - 100°C
2. TCD - 160°C, Filament=250°C
d. Flow
1. FID - 22 ml/min
2. TCD - 30 ml/min
e. Electrometer
1. FID - ATTENUATOR - ∞
RANGE - 10^{-12}amps/mV
2. TCD - ATTENUATOR - ∞
RANGE - 0.5mV

8. PROCEDURE

8.1 Start Up
1. Set instrument conditions.
2. Open helium tank.
3. Turn on instrument.
4. Allow TCD to stabilize for 6 hours. While waiting for stabilization, set up integrator (section 8.3a).
5. Open air and H_2 tanks. After 30 seconds ignite flame. Do not allow toggle switch to stay in ignite position for more than 4 seconds.
6. While waiting for warm up (5 minutes), change all septa.
7. Start injecting.

8.2 Standardization
To calibrate the instrument three standardized gases of appropriate concentration are injected in triplicate. For each concentration, the peak areas are compared and must be within 10% of each other. If not, additional injections are made until a 10% agreement is achieved.

8.3 Integrator Set up: FID and TCD
1. Turn power on.
2. Enter date and time.
3. With edit mode in A, press DIALOG.
4. Enter the following;

```
FILE NAME= CO2
TT=.01 TF=AZ  TV=1
TT=.02 TF=II  TV=1
TT=2           TF=II   TV=0
TT=2.01        TF=PM TV=1
TT=3.2 TF=ER  TV=1
Press Enter, Press enter
```

5. With edit mode in B, press DIALOG.

6. Enter the following;

FILE NAME= CH4
TT=.01 TF=AZ TV=1
TT=.02 TF=II TV=1
TT=1 TF=II TV=0
TT=1.01 TF=PM TV=1
TT=2 TF=ER TV=1
Press enter, press enter

8.4 Shut Down

1. Close H_2 and air tanks.
2. Turn off power.
3. After the TCD is cool (12 hours), close He tank.

9. QUALITYCONTROL

9.1 After every tenth sample a reference standard is injected to check the calibration of the instrument. The reference must be within 5% of the mean value calculated from the initial standardization of the instrument. If value is out of range, the instrument must be recalibrated.

10. MAINTENANCE

10.1 To remove water from the silica gel trap and recondition the column, the Varian is baked out the night before a day's run.

a. To bake out set temperature programming to the following:

1. Initial temperature - 40°C Time - 0 minutes
2. Program rate - 1°C/minute
3. Final temperature - 160°C Time - ∞

b. Press start to begin.

Frgure 1 - Valco 10 Port valve

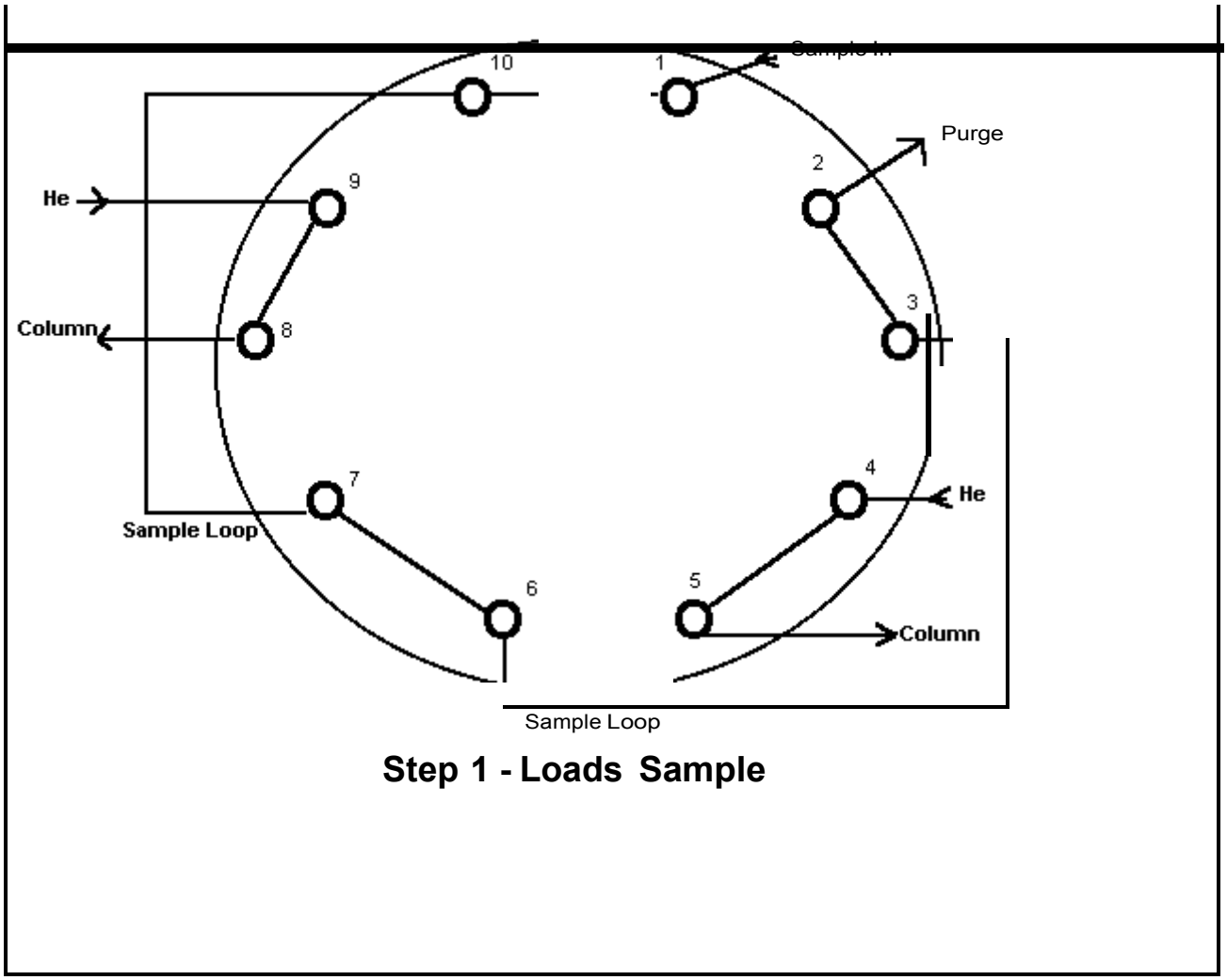

Figure 2 - Valco 10 Port valve

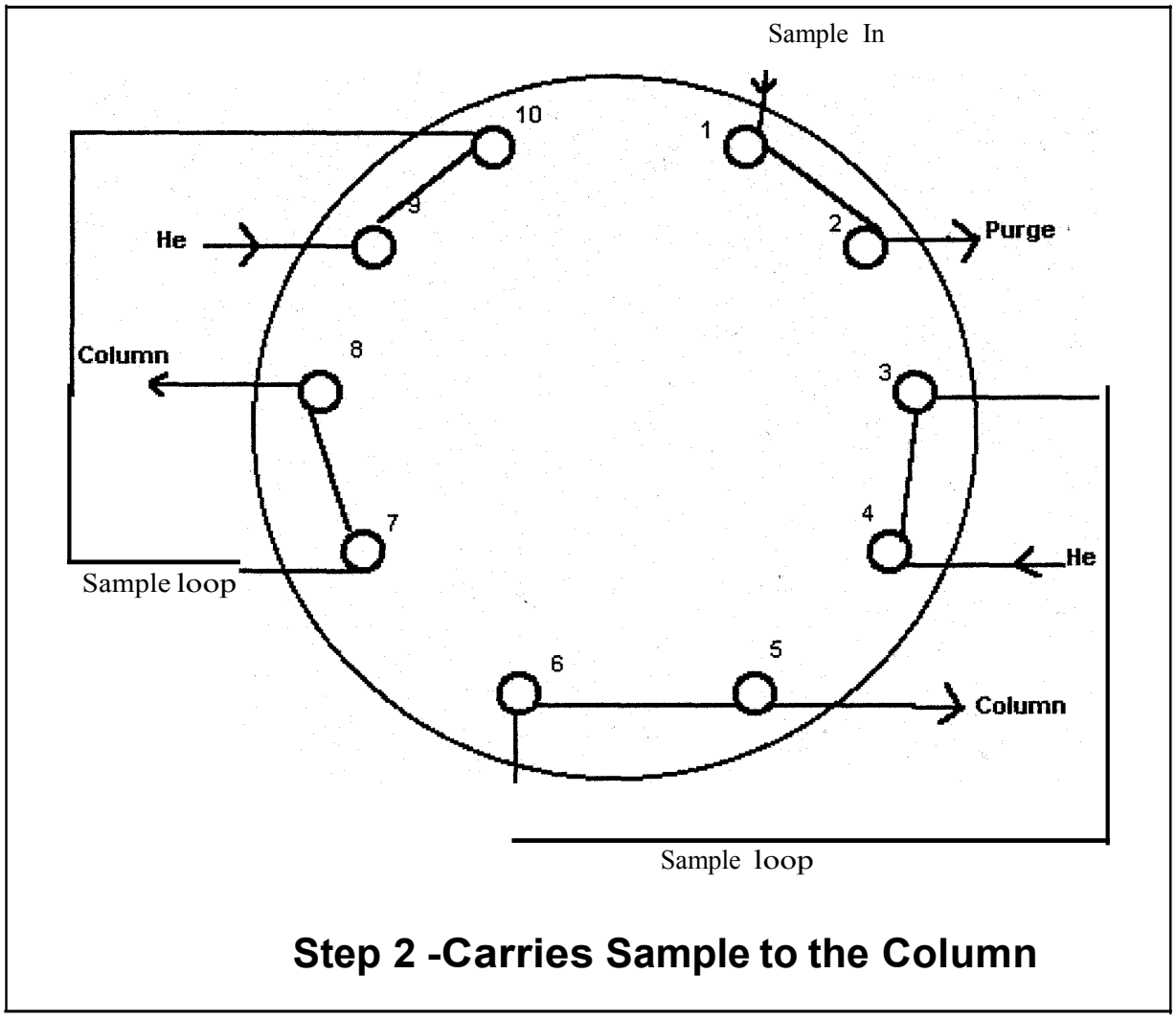

Table 1 - PRECISION AND BIAS

act()ppm	CH_4 (1.039)	CO_2 (1023)
	1.18	1153.3
	1.07	1050.6
	1.03	1216.2
	1.05	1128.4
	1.00	1096.6
	1.00	1017.3
	1.02	1027.0
	1.07	1088.4
	1.03	1147.2
	1.02	1056.3
Average	1.047	1098.13
ΣBias	0.0008	7.51
Std. Dev.	0.053	63.25

Nitrous Oxide Gas Analysis by Gas Chromatography

December 1995

Coweeta Hydrologic Lab
3160 Coweeta Lab Road
Otto, N.C. 28763

Sponsoring Agency: James M.

Vose, Project Leader U.S.

Forest Service
University of Georgia

Laboratory Manager:

James M. Deal

Chemist:

Cindi Brown

Laboratory Technician:

Carol Holland

INDEX

Section Number	Subject
01	Scope and Application
02	Summary of Method
03	Equipment
04	Safety
05	Standards
06	Requirements
07	Instrument Conditions
08	Procedure
09	Quality Control
10	Maintenance

GASCHROMATOGRAPHY

1. SCOPEANDAPPLICATION

1.1 This method is applicable for the determination of N_2O in atmospheric samples.

2. SUMMARYOFMETHOD

2.1 Gas Chromatography utilizes the attractive forces between the sample effluent and the stationary phase of the column to separate the components in the sample. The more the sample is like the column the longer the species will be retained. The components are detected by a selected detector. The components can then be quantified using a standardization curve.

A sample is injected into a heated port and vaporized. The sample is carried onto the column and to the detector by the carrier gas. The carrier gas is an inert gas such as Helium or Nitrogen. The sample and carrier gas make up the mobile phase. Detector selection is dependent on the species of interest and the concentration of the species.

2.2 The Electron Capture Detector (ECD) detects electrophilic molecules (electron seeking). The ECD has a detection limit in the high ppt and the very low ppb range.

The radioisotope Ni^{63} emits a high energy electron (beta) which bombards the carrier gas causing a plasma of positive ions, radicals and thermal electrons to form. An electron capture cell collects the thermal electrons yielding the baseline signal when only the carrier gas is going through. When electrophilic species are present they react with the thermal electrons to produce negative ions of larger mass. The decrease in detector current due to the loss of thermal electrons by recombination is quantified.

3. EQUIPMENT

3.1 Hewlett Packard Model 5890 Gas Chromatograph
The Hewlett Packard is equipped with an Electron Capture Detector. Column capability is packed.

3.3 Hewlett Packard Model 3392A Integrator
The Hewlett Packard integrator is connected to the Hewlett Packard Gas Chromatograph.

3.4 Syringe - 500ul SGE gas tight
Needle - beveled 25 gauge

4. SAFETY

4.1 All gas cylinder connections must be leak free.

4.2 The operator must be familiar with the ECD safety warnings (section 11-24 and 11-25, in the HP 5890A gas chromatograph reference manual).

5. STANDARDS

5.1 All gas standards are certified and in nitrogen.

6. REQUIREMENTS

6.1 Gases
N_2 - grade 5.0, tank pressure = 60psi
note - N_2 must go through oxygen scrubber.

6.2 Column - 80/100 mesh Hayesep Q _"x10ft

6.3 Septa
a. Hewlett Packard
3/8" Thermogreen LB-2
Supplier - SUPELCO
CAT # 2-0677
b. Gas Sampling Valves
3/8" Grey Septa
Manufacturer - Unknown

7. INSTRUMENTCONDITIONS

7.1 a. Injector - off
b. Oven - 60°C
c. Detector - 325°C
d. Flow - 30ml/min
e. Electrometer
ATTENUATOR - 2^0
RANGE - 2^0

8. PROCEDURE

8.1 Start Up
1. Set instrument requirements.
2. Open Nitrogen tank.
3. Turn on instrument.
4. Allow to stabilize 24 hours.
5. While waiting for stabilization, change all septum and set up integrator (section 8.3b).
6. Start injecting.

8.2 Standardization
To calibrate the instrument three standardized gases of appropriate concentration are injected in triplicate. For each concentration, the peak areas are compared and must be within 10% of each other. If not, additional injections are made until a 10% agreement is achieved.

8.3 Integrator Set up
1. Turn power on.
2. Enter Date and Time by pressing OP(1).
3. Set Chart Speed to 0.5.
4. Set Attenuation to 2^2.
5. Control integration by:
pressing INTG(9)TIME 0.01.

pressing INTG(-9)TIME 2.0.

6. STOP run TIME 5.0.

8.4 Shut Down

1. Turn off ECD.
2. After the ECD is cool, close off N_2.
3. Turn off power.

9. QUALITYCONTROL

9.1 After every tenth sample a reference standard is injected to check the calibration of the instrument. The reference must be within 5% of the mean value calculated from the initial standardization of the instrument. If value is out of range, the instrument must be recalibrated.

10. MAINTENANCE

10.1 The Hewlett Packard is baked out when chromatograms are consistently poor and a 15 minute injection break does not improve the quality.

a. To bake out set temperature programming to the following:

1. Initial temperature - 60°C Time - 0 minutes
2. Program rate - 1°C/minute
3. Final temperature - 160°C Time - 700 minutes

b. Press start to begin.

Note: The integrator for the Hewlett Packard will begin when the start button is pressed. Therefore, disconnect the integrator.

11. REFERENCES

11.1 HP5890AGasChromatographOperatorsManual, Hewlett Packard, 1988

Table 1 - PRECISION AND BIAS

	NIST Value act(.495ppm)
	.49
	.55
	.57
	.49
	.48
	.50
	.40
	.40
	.40
	.39
Average	.467
ΣBias	.0028
Std. Dev.	.066

Aluminum by
Graphite Furnace Atomic Absorption Spectroscopy

December 1999

Coweeta Hydrologic Lab
3160 Coweeta Lab Road
Otto, N.C. 28763

Sponsoring Agency: James M.

Vose, Project Leader U.S.

Forest Service
University of Georgia

Laboratory Manager:

James M. Deal

Chemist:

Cindi Brown

Laboratory Technician:

Carol Harper

INDEX

INDEX

Graphite Furnace

Section Number	Subject
01	Scope and Application
02	Summary of Method
03	Interferences
04	Range
05	Apparatus and Equipment
06	Safety
07	Requirements
08	Reagents
09	Standards
10	Procedure
11	Quality Control
12	Washing Procedure for Glassware and Centrifuge Tubes
13	References

TABLES

1. Set Up Values for Graphite
2. Precision and Bias

FIGURES

1. Sample ID/Wt File
2. Instrument Page
3. AutoSampler Page
4. HGA Page

GRAPHITE FURNACE

1. SCOPE AND APPLICATION

1.1 This method is applicable for the determination of Aluminum (Al) in sample matrices of water, 2% nitric acid and soil extracts.

2. SUMMARY OF METHOD

2.1 Atomic absorption utilizes the principle that each atom absorbs light at a specific wavelength. Therefore, at a specific wavelength, the quantity of the absorbing element can be quantified and is proportional to its concentration. A sample is placed in a graphite tube which is in the path of light with a wavelength of 309.3cm(Al absorption band). The sample then undergoes temperature programming which dries, ashes and atomizes the sample. The absorption of light by the atoms quantifies the amount of Al present through the use of Beer's Law A=abc.

Where, A=absorbance
a=absorption coefficient for the absorbing species
b=length of light path
c=concentration

A three point calibration curve is developed by plotting absorbance versus concentration.

3. INTERFERENCES

3.1 Because the matrix does not completely volatilize off during the ashing step, spectral interference can arise through background absorption of the matrix. This is controlled by the addition of Mg(NO3)2 (Magnesium Nitrate).

4. RANGE

4.1 0.01ppb - 0.12ppb

5. APPARATUS AND EQUIPMENT

5.1 Perkin Elmer model 2100 Atomic Absorption Spectrophotometer

5.2 Perkin Elmer model AS 70 Autosampler

5.3 Perkin Elmer HGA 700 Graphite Furnace

5.4 Magitronic 486DX2-50

5.5 Epson model EX-800 printer

5.6 Interfacing software - Perkin Elmer m2100 - V9.5 Feb. 17, 92

6. SAFETY

6.1 Because temperatures reach 2700°C a white light is produced. Therefore avoid looking at the furnace during a run.

7. REQUIREMENTS

7.1 Gases - argon, zero grade

7.2 Regulator Setting - 40 psi

7.3 Water - 2.4 liters/minute

8. REAGENTS

8.1 1% $Mg(NO_3)_2$ - Weigh out 1.0g of ultra-pure $Mg(NO_3)_2$. Transfer to a 100ml volumetric flask. Bring to volume with deionized water.

8.2 0.2% HNO_3 sampler wash - Add 700ml deionized water to a 1L volumetric flask. Pipette in 2ml trace metal grade concentrated HNO_3. Fill to the mark with deionized water.

9. STANDARDS

9.1 2mg/L Stock Standard Solution
Perkin Elmer AS STD, INSTRUMENT CALIBRATION-1, PE # N930-0100, containing 1,000ug/ml Aluminum. Pour out a small quantity of standard into a disposable beaker. Allow to come to room temperature. Pipette out 2ml into an acid washed (see procedure 11.1) 1L volumetric flask. Bring to volume with deionized water.

9.2 Calibration Standards

a. Using acid washed (see section 11.1 for procedure) 1L volumetric flask, weigh out the following:
   For 20ppb - 10.0g
   For 40ppb - 20.0g
   For 60ppb - 30.0g
b. Bring to volume with deionized water and invert 20 times To mix.

9.3 Reference Standard
Perkin Elmer AS STD, ALTERNATE WATER POLLUTION, 11 METALS, PE # N930-0214, containing 20ug/ml Al in 2% nitric acid

a. Pour out a 4ml aliquot of the reference standard into a 5ml disposable beaker. Allow to come to room temperature.
b. In an acid washed (see section 12.1 for procedure) 1L volumetric flask, pipette out 1ml. Bring to volume with deionized water. Cover and then invert 20 times to mix. This will give a concentration of 20.0ppb Al.

10. PROCEDURE

10.1 Turn on computer, spectrophotometer, and graphite furnace.

10.2 At the C> prompt, type AAS.

10.3 Element Selection
- a. Type in lamp #4 for Al and depress lamp soft key.
- b. Depress Current.
- c. Select Furnace Analysis.

10.4 Set-Up and Alignment
- a. Swing furnace out of light path.
- b. Depress set up.
- c. Turn off background correction by depressing BG CORR soft key.
- d. Depress Gain.

10.5 Data Management
- a. Go to data management by depressing Data Manag.
- b. Fill in ID/WT Spreadsheet.
- b. Save file.

10.6 Program Element
- a. Press Prog Elem key. Enter element, ID weight file, and storage file (see figure 1).
- b. Press Recall File. Check Instru Page (see figure 2). Check auto sampler page (AS Page) and enter in sample location number "from" and "to" (see figure 3).
- c. Check HGA Page for conditions (see Figure 4).

10.7 Furnace Alignment
- a. Turn on Argon and open up water valve.
- b. Remove windows and clean with ethyl alcohol.
- c. Depress Cont Graph and move furnace back into the path of light.
- d. Depress Auto zero. Replace windows.
- e. Absorbance should be <0.80. If not, clean windows again.

10.8 Autosampler Alignment
- a. Select Samp Contr and depress F6. Rotate sampler arm and determine if tip enters tube without touching the sides. The tip should not quite touch the platform of the tube.

10.9 Run
- a. Go back to Set Up and turn on background.
- b. In Samp Contr press reset until all bubbles are gone in sample line.
- c. Depress Atom Cont and heat out furnace for 5 seconds. Enter 190 for manual temperature.
- d. Depress Run Elem, turn on Printer, and depress Sampl Contr.
- e. Type 2 and depress Sampler Man. Run until a reading of 0.03 absorbance or less is obtained (0.3 for extracted std).
- f. Reset Sampler and start program.

10.10 Shut Down
- a. Go to Elem Select and exit to DOS.
- b. Turn off spectrophotometer, Graphite Furnace and the Computer.
- c. Close off water and Argon.

11. QUALITY CONTROL

11.1 A three point calibration curve is generated at the start of the run.

11.2 The calibration curve is checked using a reference standard.
An accuracy of ±15% and a precision of 3% or less is maintained.

11.3 During the run the instrument recalibrates every tenth sample.

12. WASHING PROCEDURE FOR GLASSWARE

12.1 a. Wash in Joy dish washing liquid.
b. Rinse with tap water.
c. Rinse with 5% HNO3.
d. Rinse five times in deionized water.

13. REFERENCES

13.1 Analytical Methods For Atomic Absorption Spectrophotometry, Perkin-Elmer, Revision 0303-0152, January 1982.

Table 1. Setup Values for PE 2100

Lamp#	Element	Wave length	Energy	Current	Slit
4	Al	309.3	62	18mA	0.7L

Table 2 - PRECISION AND BIAS

	Al Total 20ppb	Al Extract 20ppb
	24	22
	24	20
	24	18
	23	25
	26	22
	25	19
	24	21
	22	20
	22	20
	19	17
Average	23.3	20.4
ΣBias	0.33	0.04
std. dev.	1.95	2.27
MDL	5.49	6.40

Figure 1. Sample ID/Wt File

Program ID/Weight Date: 95/10/23

ID/Weight File Name: totalal

Page 1	AS/Location	Sample ID	Weight	Volume
	0		1.0	1.0
	1	Mg(NO3)2	1.0	1.0
	2	blk	1.0	1.0
	3	60	1.0	1.0
	4	40	1.0	1.0
	5	20	1.0	1.0
	6	PE Ref 20	1.0	1.0
	7	ws 18 5/9	1.0	1.0
	8	27	1.0	1.0
	9	blk	1.0	1.0
	10	blk2	1.0	1.0
	11	ws 18 5/16	1.0	1.0

Figure 2. Instrument Page

Program Element - Instrument Page - FURNACE Date: 95/09/12

Element: Al Wavelength (nm): 309.3 Slit (nm): 0.7
Pre-Temp.: 1700 At-Temp.: 2500 M0: 10.0 Modif.: 0.05mg Mg(NO3)2

Wavelength (nm):	309.3	Slit (nm): 0.7 L	Lamp Number: 4
Technique:	AA-BG	Lamp Current (mA):	18
Signal Processing:	PA	Integration Time (sec):	5.0
Read Delay (sec):	0.0	Printer:	DATA & SUPPL
Replicates:	2	Plot Full Scale:	1.00
BG Full Scale:	1.00		

Calibration: AUTO Standard Units: μg/L Sample Units: μg/L

S1:	60.	S2:	40.	S3:	20.
S4:		S5:		S6:	
S7:		S8:		Reslope:	

Figure 3. AutoSampler Page

Program Autosampler - Page 1 Element: Al Date: 96/07/02

Calib.: AUTO
Modifier 1 Loc.: 1 Vol.: 5
Modifier 2 Loc.: Vol.:

Solutions	Location	Volume Blank Vol.
Std.Blank	2	20
Standard 1	3	20
Standard 2	4	20
Standard 3	5	20
Standard 4		
Standard 5		
Standard 6		
Standard 7		
Standard 8		
Reslope		
Sample Blank		
Samples from 6 to 40		20
Restd/Reslop at Locations: 15 30		

Figure4. HGA Page

Program Element HGA - Page Date: 96/07/02

Element: Al Wavelength: 309.3 nm Slit: 0.7 L
Pre-Temp.: 1700 At-Temp.: 2500 M0: 10.0 Modif.: 0.05 mg Mg(NO3)2

Step Number	Furnace Temperature	Ramp	Time Hold	Internal Gas Flow	Read On
1	150	5	30	300	
2	1150	5	60	300	
3	20	1	15	300	
4	2500	0	5	0	-1.0
5	2650	1	6	300	
6		1	1	300	
7		1	1	300	
8		1	1	300	
9		1	1	300	

Injection Temperature: 'C

Total Kjeldahl Nitrogen by Automated Wet Chemistry
using Perstorp by AlpKem

October 2009

Coweeta Hydrologic Lab
3160 Coweeta Lab Road
Otto, N.C. 28763

Sponsoring Agency: James M.

Vose, Project Leader U.S.

Forest Service
University of Georgia

Laboratory Manager:

Cindi Brown

Chemist:

Cindi Brown

Laboratory Technician:

Carol Harper
Neal Muldoon
Sheila Gregory

Last TKN Analysis – Samples from March 2009

INDEX

Section Number	Subject
01	Scope and Application
02	Summary of Method
03	Definitions
04	Interferences
05	Safety
06	Apparatus and Equipment
07	Reagents and Consumable Materials
08	Calibration and Standardization
09	Quality Control
10	Procedure and Calculations
11	Precision and Bias
12	References

TABLES

1. Method Detection Limits.
2. Suggested Calibration Standards for Samples at Coweeta.
3. Single-Operator Precision and Bias for TKN determined from Quality Control Samples.

FIGURES

1. System diagram for Perstorp 3500.
2. Manifold setup for TKN.

1. SCOPEANDAPPLICATION

1.1 This method is applicable to the determination of TKN in Stream, Precipitation, Thrufall, and Lysimeter samples.

1.2 Method detection limits are summarized in Table 1.

1.3 This method is not recommended for samples that are highly colored.

2. SUMMARYOFMETHOD

2.1 This is a wet digestion method where the sample is heated to 380°C in the presence of sulfuric acid, potassium sulfate and mercury catalyst. These conditions break down the organic nitrogen bonds and convert them to ammonium sulfate. Samples are drawn from the automated sampler into a stream of reagents. Air bubbles are introduced to keep each sample discreet. Ammonium reacts with salicylate and hypochlorite in an alkaline solution to form indophenol blue. Sodium Nitroprusside is added to intensify the blue-green color. The reaction is speeded up by running the solution through a heating bath coil at 37^{0} C. After the reaction has developed color the solution goes to the detector measuring at 660nm. The detector is a spectrometer that utilizes a flow cell to measure changes in transmitted light intensity. Beer's law correlates transmitted light intensity to the concentration of ions in the sample.

$$\log(1/T) = abc$$

where: T = transmittance
a = absorptivity
b = length of light path
c = concentration of ion (mg/L)

Calibration curves are constructed from a series of known standard concentrations. The concentration of the sample is calculated based on the calibration curve.

3. DEFINITIONS

3.1 Absorbance -- The measurement of the absorption of a particular wavelength of light as it passes through a liquid.

3.2 Colorimetry -- the measurement of light transmitted by a colored complex as a function of concentration.

3.3 Monochromator -- a detector which measures absorbance of light at specific wavelengths using a diffraction grating to select a specific wavelength of light.

3.4 Peristaltic Pump -- a pumping system which moves liquids by compressing flexible tubing between a solid surface (platen) and a roller.

3.5 Segmented Flow Analysis (SFA) -- a technique where the samples are separated by bubbles of a gas. The bubbles also help mix the reagents as they move through the manifold coils.

3.6 Transmittance -- The ratio of the radiant power transmitted by a sample to the radiant power incident on the sample

4. INTERFERENCES

4.1 Highly colored samples that absorb in the wavelength range of 620 - 660 nm can cause false positive readings. Samples at Coweeta are usually clear so this is no problem.

4.2 Avoid using Ammonia based cleaning products in the lab.

5. SAFETY

5.1 Extra precaution should be used when handling the digested samples. Samples contain 4% Sulfuric Acid and a trace amount of Mercury. Wear lab coat, gloves, and eye protection when using Sulfuric Acid and Sodium Hydroxide. Always work under a hood when making up the reagent, vapors can also be harmful.

5.2 Wear protective clothing when using Sodium Hypochlorite.

5.3 Wear protective clothing when using Sodium Nitroferricyanide.

5.4 Wear protective clothing when working around the manifold, tubes could become clogged and pressure may increase enough to cause a tube to pop loose.

5.5 Read the procedure sheet for TKN digestion and the lab safety plan. Ask the lab safety officer if you have any questions.

6. APPARATUSANDEQUIPMENT

6.1 Perstorp Enviroflow 3500

6.1.1 Autosampler:
Perstorp model 501 is a 300 position random access sampler. It can be operated in manual or remote mode.

6.1.2 Dilutor:
Perstorp model 511 is an autodilutor interfaced to a computer. After a sample run is complete the computer recognizes peaks that have run above the highest calibration standard. The computer instructs the autosampler and the dilutor to rerun the off scale samples making a 10 X dilution.

6.1.3 Peristaltic Pump:
Perstorp model 502 is a multispeed peristaltic pump with individual platens for 24 tubing channels. Pump speed and tubing inside diameters determine the flow rates for the sample and reagents.

6.1.4 Mixing Manifolds:
Perstorp Supercartridge Jr. is a preconfigured mixing manifold for testing of Ammonium. The cartridge consist of polymeric tubing, fitting, reagent tees, coils and connectors.

6.1.5 Cartridge Heater:
Perstorp model 503 cartridge heater is an electronic digitally operated temperature controller. It incorporates four heater cones to provide heat to Supercartridges when needed.

6.1.6 Detector:
Perstorp model 510 is a variable wavelength, flow through absorbance detector. Wavelength is selected by a user adjustable concave holographic grating. The detector can operate from 360 nm to 800 nm with a tungsten halogen lamp. Output from the detector is sent to the computer and digitized.

6.1.7 Computer Interface:

Analog signals from the detectors are processed by a ER interface.

6.1.8 Computer Software:
Perstorp Winflow software package allows user control of the autosampler, diluter, data acquisition, calculation of results and analog signal display. Analysis parameters are entered via on screen tables and a series of prompting menus. Reports are generated to printer or disk.

6.1.9 Computer:
System requires at least a Pentium 90hz microprocessor, 16 meg of ram, floppy disk drive, cd rom drive, 1gig hard drive, color monitor, printer, mouse, serial port, and parallel port.

7. REAGENTSANDCONSUMABLEMATERIALS

Prepare all reagents in Ammonia free DI water. Filter the Working Buffer and Salicylate/Nitroferricyanide reagents prior to use.

7.1 Stock 10N Sodium Hydroxide (250mL)
Dissolve 100g NaOH in 200mL DI water and dilute to 250mL. Cool and store in a polyethylene container. Solution is stable for one month.

7.2 Stock Buffer, Sodium Phosphate Dibasic (500mL)
Dissolve 67g of Sodium Phosphate Dibasic Na_2HPO_4 in 400mL of DI water. Add 25mL of 10N Sodium Hydroxide and dilute to 500mL with DI water.

7.3 Working Buffer (500mL)
Mix 100mL of Stock Buffer and 100mL of DI water in 500mL flask. While stirring, add 125mL of DI water and 30mL 10N Sodium Hydroxide. Dilute to 500mL with DI water and mix well. Add .5mL Brij-35 and mix gently to prevent foaming. Prepare the working buffer daily.

7.4 Sodium Hypochlorite (200mL)
Dilute 12mL of NaOCl 5.25% (household bleach) to 100mL with DI water. Mix well and transfer to dark polyethylene bottle. Reagent is stable for one day.

7.5 Sodium Salicylate/Nitroferricyanide (250mL)
Dissolve 75g of Sodium Salicylate $NaC_7H_5O_3$ and .150g Sodium Nitroferricyanide $Na_2Fe(CH)_5NO \cdot 2H_2O$ in 200mL DI water and dlute to 250mL. Store reagent in dark polyethylene bottle at room temperature. Make up reagent weekly.

7.6 DI water with Brij - 35, 30% w/v (250mL)
Add 3 drops of Brij - 35 to 250mL of DI water. This is used as the diluent and as the startup solution.

7.7 Sampler Wash, 3% - 4% H_2SO_4 (2L)
Prepare sampler wash solution with same acidity as digested samples. Coweeta TKN digest are usually between 3% to 4% H_2SO_4. Add 70mL concentrated Sulfuric Acid to 1500mL of Ammonia free DI water. Mix well and dlute to 2L with DI water.

8. CALIBRATIONANDSTANDARDIZATION

8.1 Anion calibrants, 1000mg/L NH_4, is purchased from Ricca yearly.

8.2 Working Standards:
Tare 500 mL flask on balance and make the following standards on w/w basis.
Ammonium: .10 mg/L, .20 mg/L, .50 mg/L, 1.00 mg/L

9. QUALITYCONTROL

9.1 Deionized water blanks are poured up weekly with the DWS samples. These serve as a check on the DI water system, and the bottle washing. A random sample of washed bottles are checked with a conductivity meter and any reading above 1.0 μmho indicates that set of bottles needs to be rinsed again. DI water blanks are also poured up for the Al collection. Blanks are taken into the field and treated as samples. Another checkof the DI system is weekly measurements of the DI conductivity, when the NADP sample is measured. Any reading above 1.0 μmho indicates a dirty cartridge and the cation exchange cartridges are changed.

9.2 Stock solutions are made up or purchased yearly. Two aliquots are set aside in order to check the stock concentration if necessary.

9.3 QC concentrates from NSI are sent to the lab quarterly. They are analyzed for SO_4, Cl, NO_3, NH_4, PO_4, and TKN. A value within the 95% C.I. is considered acceptable. Samples are run in triplicate. X bar charts will be used for these results. See Standard Methods, 1989. Perkin-Elmer cation concentrate (Alternate Metals II) is used to check the Atomic Absorption Spectrophotometer. It is purchased yearly.

9.4 A standard curve is determined before every analysis with the Perstorp 3500. R squared must equal 0.98 or greater before samples are analyzed.

9.5 Daily QC checks are done with solutions made from the NSI concentrates. Acceptable ranges for each ion are based on 95% confidence limits.

9.6 Check limits of detection annually for all instruments.

9.7 Check calibration of balances twice a year.

10. PROCEDUREANDCALCULATIONS

10.1 Startup:

1. Make up reagents and standards.
2. Configure pump with proper tubes and connect to Ammonia cartridge.
3 Turn power on and apply tension to pump platens.
4. Connect all lines to H_2O and surfactant and observe stream.
5. Connect reagent lines and observe stream.

10.2 Computer and Sampler startup:

1. Turn power on and run Winflow program.
2. Select and click the Sample Table button. Edit an existing table or create a new one. Table should start with highest calibration standard (SYNC) sample followed by the lowest sample for carry over correction (CO) then a read baseline (RB). Calibration standards are next with duplicates from highest to lowest. Include QC standard after calibration standards and RB. Insert calibration verification (mid-range standard) after each 20 samples. For each sample cup indicate: location, sample ID, type, dilution, and weight. Rename, save and print the sample table.
3. Click the Method Editor button and load an existing Methods file or create a new file. Verify all settings are correct. Refer to a previous method or the help files.
4. Select the Data Collect button and verify or select Method and Sample Table in Run Setup. Start pump with reagents tubes in surfactant water.
5. Enter an Operator ID and verify or enter a Filename for the run.
6. Click on the Play button and monitor the baseline. When the baseline is stable, startup solution (water) then switch to reagents. Allow a few minutes for reagents to equilibrate and monitor for a steady baseline.

10.3 Sample run:

1. When a stable baseline has been achieved use the Sample Table print out to start loading the sample trays.
2. Click the Fast Forward Start button to start data collection and sampler.
3. Monitor the run until the SYNC peak has eluted and successfully marked the top of the peak at its steady state. Allow the run to continue. If run stops automatically then data file will be saved. If the run is stopped manually by clicking the Stop button then be sure to save the results once the completed run is displayed.
4. Review the results. Calibration curve should yield a r^2 value greater than .98.
5. Reports are produced by opening the File window and selecting the proper option. Reports may be edited, printed, and exported as needed.

10.4 Shutdown:

1. Connect all reagent lines to deionized water.
2. Pump deionized water through the system for 15-20 minutes.
3. Turn off the 509 power and unlatch all pump platens. Caution: Pump tubes may be seriously damaged if the platens remain latched with the pump power off.
4. If the cartridge is to be stored away from the system or if it will not be used for a week or more, remove the reagent lines from the deionized water and pump the cartridge completely dry.
5. Turn off the gas supply if not being used.

10.5 Troubleshooting:

1. Don't overlook the obvious. Look for the simplest and most obvious cause for a particular problem or solution. Check for correct power to all modules and the power switches are on. Check for correct connection of all control and signal lines. Check tubing connections and flow through system.
2. Rule out operator induced errors. Consult the system manual and manuals for each application for proper operating procedures and protocols. Review test methodologies and flow diagrams to verify operation parameters.
3. Isolate and define the problem. Categorize the problem or symptom as one of the following:

Chemistry	Hydraulic	Electrical/Mechanical
Reagent	Pump tubing	Circuit components
Standards	Bubble size	Optics/Lamps
pH	Surfactant	Photometer/Detector
Temperature	Pump	Cabling

4. Eliminate one variable at a time. Using good experimentation techniques, change only one component or variable at a time and note the changes and results. In this manner, the problem may be cured or the solution more clearly defined.
5. Document the solution. Keep a log of your troubleshooting activity including problem, symptoms, causes, and solution. This information may be helpful for future troubleshooting sessions or for other users.
6. Refer to the operation manual for further troubleshooting guide.

11. PRECISIONANDBIAS

11.1 Single operator precision and bias were obtained from the analysis of quality control check samples. QC samples were obtained from NSI Solutions and were diluted according to manufactures directions. Table 3 summarizes the data.

12. REFERENCES

12.1 PerstorpEnviroflow3500OperationManuals, Perstorp Analytical Corporation, 1992.

12.2 MethodsforChemicalAnalysisofWaterandWaste, Method 351.2, EPA, 1983.

12.3 StandardMethodsfortheExaminationofWaterandWastewater, Section 420, "Determination of Organic Nitrogen ", 16th edition, 1985.

Table 1. Method Detection Limits and Concentration Ranges for TKN

Analyte	Method Detection Limit mg/L	Concentration Range mg/L
TKN	.086	.1 - 1.0

Method Detection Limit: Sample Standard Deviation X Student's t value for one-tailed test at 99% confidence level with degrees of freedom = 9

Table 2. Suggested Calibration Standards for TKN Samples at Coweeta

Analyte	Calibration Standards mg/L
TKN	0.10, 0.20, 0.50, 1.00

Table 3. Single Operator Precision and Bias for TKN determined from Quality Control Samples

Analyte	True Value mg/L	Number of Samples	Mean Measured mg/L	Mean Bias, mg/L	Standard Deviation, mg/L	Relative Standard Deviation, %
TKN	.390	9	.398	.008	.030	7.461

Relative Standard Deviation: 100 X (Sample Standard Deviation/Mean Value)

Figure 1.

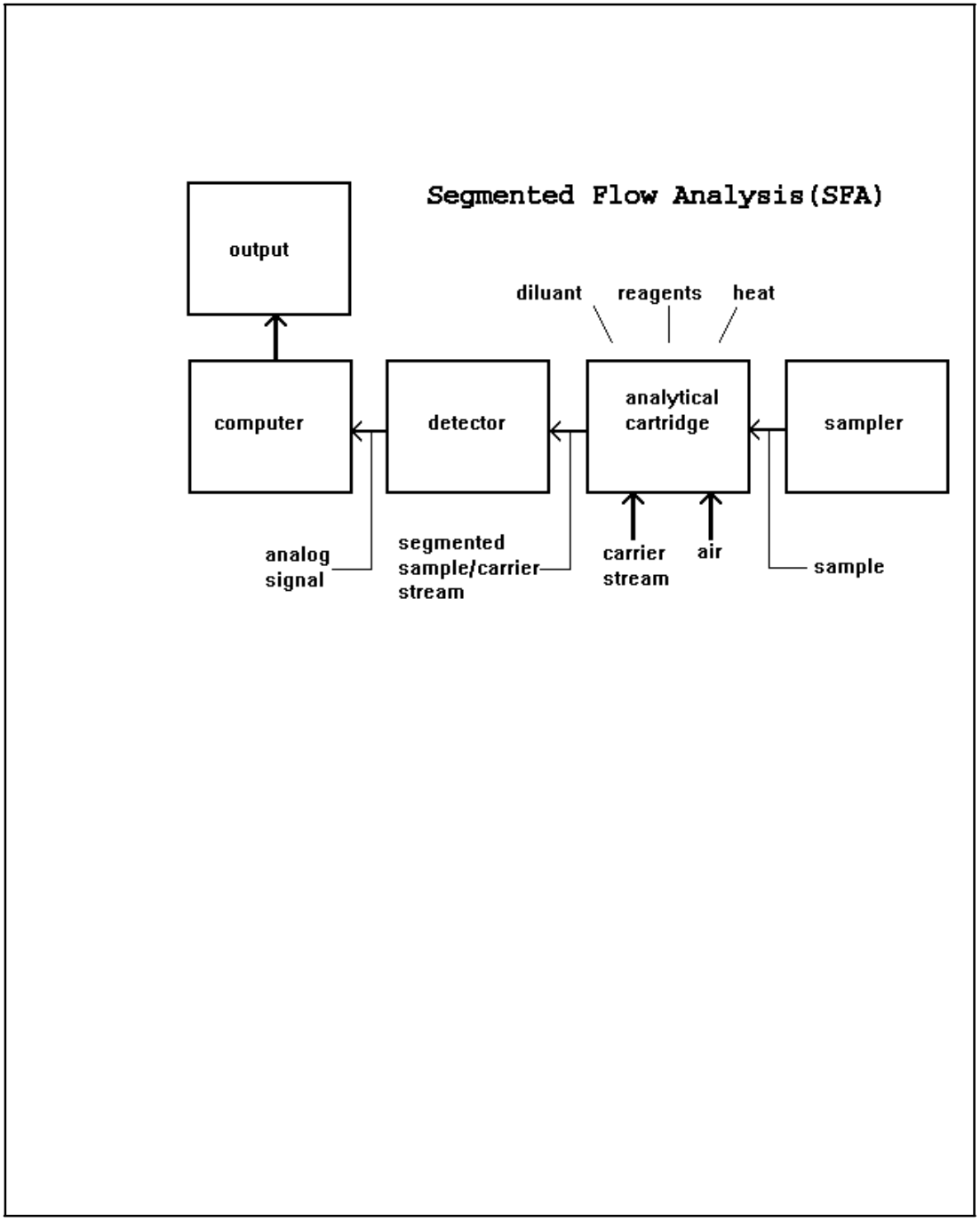
Segmented Flow Analysis(SFA)
output
diluant
reagents
heat
computer
detector
analytical cartridge
sampler
analog signal
segmented sample/carrier stream
carrier stream
air
sample

Figure 2.

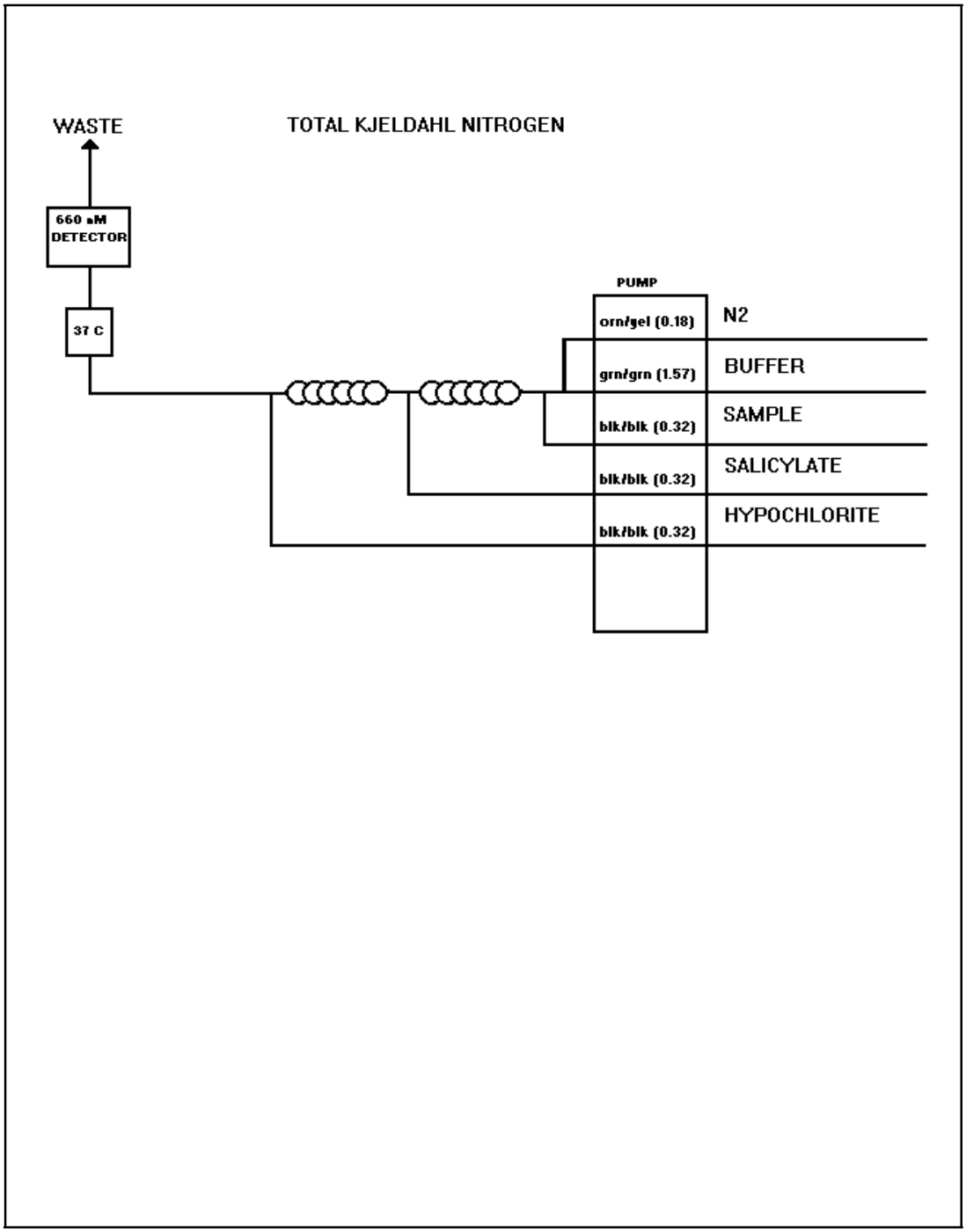
WASTE
TOTAL KJELDAHL NITROGEN
660 nM DETECTOR
37 C
PUMP
orn/gel (0.18)
N2
grn/grn (1.57)
BUFFER
blk/blk (0.32)
SAMPLE
blk/blk (0.32)
SALICYLATE
blk/blk (0.32)
HYPOCHLORITE

Automated Wet Chemistry
for Ammonium
using Perstorp by AlpKem

October 2009

Coweeta Hydrologic Lab
3160 Coweeta Lab Road
Otto, N.C. 28763

Sponsoring Agency: James M.

Vose, Project Leader U.S.

Forest Service
University of Georgia

Laboratory Manager:

Cindi Brown

Chemist:

Cindi Brown

Laboratory Technician:

Carol Harper
Neal Muldoon
Sheila Gregory

Instrument retired October 25, 2011

AlpKem

Section Number	Subject
01	Scope and Application
02	Summary of Method
03	Definitions
04	Interferences
05	Safety
06	Apparatus and Equipment
07	Reagents and Consumable Materials
08	Calibration and Standardization
09	Quality Control
10	Procedure and Calculations
11	Precision and Bias
12	References

TABLES

1. Method Detection Limits.
2. Suggested Calibration Standards for Samples at Coweeta.
3. Single-Operator Precision and Bias for Ammonium determined from Quality Control Samples.
4. Example of Sample ID Table.
5. Example of Sampler/Channel Setup Table.
6. Example of Standards Table

FIGURES

1. System diagram for AlpKem.
2. Manifold setup for Ammonium.

1. SCOPEANDAPPLICATION

1.1 This method is applicable to the determination of Ammonium in Stream, Precipitation, Thrufall, Lysimeter, and in extracted soil samples.
1.2 Method detection limits are summarized in Table 1.
1.3 This method is not recommended for samples that are highly colored.

2. SUMMARYOFMETHOD

2.1 Samples are drawn from the automated sampler into a stream of reagents. Air bubbles are introduced to keep each sample discreet. Ammonium reacts with alkaline phenol and hypochlorite to form indophenol blue. Sodium Nitroprusside is added to intensify the blue color. The reaction is speeded up by running the solution through a heating bath coil at 50^0 C. After the reaction has developed a color the solution goes to the detector. The detector is a spectrometer that utilizes a flow cell to measure changes in transmitted light intensity. Beer's law correlates transmitted light intensity to the concentration of ions in the sample.

$$\log(1/T) = abc$$

where: T = transmittance
a = absorptivity
b = length of light path

c = concentration of ion (mg/L)

Calibration curves are constructed from a series of known standard concentrations. The concentrations of the samples are calculated based on the calibration curve.

3. DEFINITIONS

3.1 Absorbance -- The measurement of the absorption of a particular wavelength of light as it passes through a liquid.

3.2 Colorimetry -- the measurement of light transmitted by a colored complex as a function of concentration.

3.3 Monochromator -- a detector which measures absorbance of light at specific wavelengths using a diffraction grating to select a specific wavelength of light.

3.4 Peristaltic Pump -- a pumping system which moves liquids by compressing flexible tubing between a solid surface (platen) and a roller.

3.5 Segmented Flow Analysis (SFA) -- a technique where the samples are separated by bubbles of a gas. The bubbles also help mix the reagents as they move through the manifold coils.

3.6 Transmittance -- The ratio of the radiant power transmitted by a sample to the radiant power incident on the sample

4. INTERFERENCES

4.1 Highly colored samples that absorb in the wavelength range of 620 - 640 nm can cause false positive readings. Samples at Coweeta are usually clear so this is no problem.

4.2 Avoid using Ammonia based cleaning products in the lab.

5. SAFETY

5.1 Extra precaution should be used when handling the liquid Phenol. Wear lab coat, gloves, and eye protection when using Phenol. Always work under a hood when making up the reagent, vapors can also be harmful.

5.2 Wear protective clothing when using Sodium Hypochlorite.

5.3 Wear protective clothing when using Sodium Nitroferricyanide.

5.4 Turn on the exhaust vent over the Autoanalyzer system. Wear protective clothing when working around the manifold, tubes could become clogged and pressure may increase enough to cause a tube to pop loose.

5.5 Read the lab safety plan and ask the lab safety officer if you have any questions.

6. APPARATUSANDEQUIPMENT

6.1 Perstorp Enviroflow 3500

6.1.1 Autosampler:
Perstorp model 501 is a 300 position random access sampler. It can be operated in manual or remote mode.

6.1.2 Dilutor:
Perstorp model 511 is a autodilutor interfaced to a computer. After a sample run is complete the computer recognizes peaks that have run above the highest calibration standard. The computer instructs the autosampler and the dilutor to rerun the off scale samples making a 10 X dilution.

6.1.3 Peristaltic Pump:
Perstorp model 502 is a multispeed peristaltic pump with individual platens for 24 tubing channels. Pump speed and tubing inside diameters determine the flow rates for the sample and reagents.

6.1.4 Mixing Manifolds:
Perstorp Supercartridge Jr. is a preconfigured mixing manifold for testing of Ammonium. The cartridge consists of polymeric tubing, fitting, reagent tees, coils and connectors.

6.1.5 Cartridge Heater:
Perstorp model 503 cartridge heater is an electronic digitally operated temperature controller. It incorporates four heater cones to provide heat to Supercartridges when needed.

6.1.6 Detector:
Perstorp model 510 is a variable wavelength, flow through absorbance detector. Wavelength is selected by a user adjustable concave holographic grating. The detector can operate from 360 nm to 800 nm with a tungsten halogen lamp. Output from the detector is sent to the computer interface and digitized.

6.1.7 Computer Interface:
Analog signals from the detectors are processed by an ER detector.

6.1.8 Computer Software:
Perstorp Winflow software package allows user control of the autosampler, diluter, data acquisition, calculation of results and analog signal display. Analysis parameters are entered via on screen tables and a series of prompting menus. Reports are generated to printer or disk.

7. REAGENTSANDCONSUMABLEMATERIALS

Prepare all reagents in Ammonia free DI water. Filter the Phenol and Nitroferricyanide reagents prior to use.

7.1 Stock 10N Sodium Hydroxide (250 mL)
Dissolve 100g NaOH in 200 mL DI water and dilute to 250 mL. Cool and store in a polyethylene container. Solution is stable for one month.

7.2 Alkaline Phenol (250 mL)
Place stir bar in 250 mL flask with 200mL of DI water. While stirring, add 20 mL of 10N

NaOH. Slowly add 23.5 mL of Liquid Phenol (88%) and dilute to 250 mL with DI water. Store reagent in dark polyethylene bottle at 4° C. Reagent should be a light straw color. Discard reagent if it turns brown or amber in color. Make up reagent weekly.

7.3 Sodium Hypochlorite (100 mL)
Dilute 50 mL of NaOCl 5.25% (household bleach) to 100 mL with DI water. Mix well and transfer to dark polyethylene bottle. Reagent is stable for one day.

7.4 Sodium Nitroferricyanide (250 mL)
Dissolve .125g $Na_2Fe(CH)_5NO \cdot 2H_2O$ in 200 mL DI water and dlute to 250 mL. Store reagent in dark polyethylene bottle at room temperature. Make up reagent weekly.

7.5 DI water with Brij - 35, 30% w/v (250 mL)
Add 3 drops of Brij - 35 to 250 mL of DI water. This is used as the diluent and as the startup solution. For soil resin sheets use .01N NaOH and Brij instead of DI water and Brij. For soil resin sheets make sampler wash .4N HCl acid.

8. CALIBRATIONANDSTANDARDIZATION

8.1 Anion calibrants,1000mg/L are purchased from Ricca yearly.

8.2 Working Standards:
Standards are made up in a volumetric flask. Ammonium: .010 mg/L, .050 mg/L, .100 mg/L, .200 mg/L , .600mg/L for Coweeta water samples. For N- Min samples make .050 mg/L, .100 mg/L, .50 mg/L, 1.00 mg/L in 2M KCl and use a volumetric flask. For soil resin sheets make standards in .5N HCl acid.

9. QUALITYCONTROL

9.1 Deionized water blanks are poured up weekly with the DWS samples. These serve as a check on the DI water system, and the bottle washing. A random sample of washed bottles are checked with a conductivity meter and any reading above 1.0 μmho indicates that set of bottles needs to be rinsed again. DI water blanks are also poured up for the Al collection. Blanks are taken into the field and treated as samples. Another check of the DI system is weekly measurements of the DI conductivity, when the NADP sample is measured. Any reading above 1.0 μmho indicates a dirty cartridge and the cation exchange cartridges are changed.

9.2 Stock solutions are made up or purchased yearly. Two aliquots are set aside in order to check the stock concentration if necessary.

9.3 QC concentrates from NSI are sent to the lab quarterly. They are analyzed for NO_3, NH_4, PO_4, and TKN. A value within the 95% C.I. is considered acceptable. Samples are run in triplicate. X bar charts will be used for these results. See Standard Methods, 1989.

9.4 A standard curve is determined before every analysis with the Perstorp 3500. R squared must equal 0.98 or greater before samples are analyzed.

9.5 Daily QC checks are done with solutions made from the NSI concentrates. Acceptable range for each ion are based on 95% confidence limits.

9.6 Check limits of detection annually for all instruments.

9.7 Check calibration of balances twice a year.

10. PROCEDUREANDCALCULATIONS

10.1 Startup:

1. Make up reagents and standards.
2. Configure pump with proper tubes and connect to Ammonia cartridge.
3. Turn power on and apply tension to pump platens.
4. Connect all lines to H_2O and surfactant and observe stream.
5. Connect reagent lines and observe stream.

10.2 Computer and Sampler startup:

1. Turn power on and run Winflow program.
2. Select and click the Sample Table button. Edit an existing table or create a new one. Table should start with highest calibration standard (SYNC) sample followed by the lowest sample for carry over correction (CO) then a read baseline (RB). Calibration standards are next with duplicates from highest to lowest. Include QC standard after calibration standards and RB. Insert calibration verification (mid-range standard) after each 20 samples. For each sample cup indicate: location, sample ID, type, dilution, and weight. Rename, save and print the sample table.
3. Click the Method Editor button and load an existing Methods file or create a new file. Verify all setting are correct. Refer to a previous method or the help files.
4. Select the Data Collect button and verify or select Method and Sample Table in Run Setup. Start pump with reagents tubes in surfactant water.
5. Enter an Operator ID and verify or enter a Filename for the run.
6. Click on the Play button and monitor the baseline. When the baseline is stable, startup solution (water) then switch to reagents. Allow a few minutes for reagents to equilibrate and monitor for a steady baseline.

10.3 Sample run:

1. When a stable baseline has been achieved use the Sample Table print out to start loading the sample trays.
2. Click the Fast Forward Start button to start data collection and sampler.
3. Monitor the run until the SYNC peak has eluted and successfully marked the top of the peak at its steady state. Allow the run to continue. If run stops automatically then data file will be saved. If the run is stopped manually by clicking the Stop button then be sure to save the results once the completed run is displayed.
4. Review the results. Calibration curve should yield a r^2 value greater than .98.
5. Reports are produced by opening the File window and selecting the proper option. Reports may be edited, printed, and exported as needed.

10.4 Shutdown:

1. Connect all reagent lines to deionized water.
2. Pump deionized water through the system for 15-20 minutes.
3. Turn off the 509 power and unlatch all pump platens. Caution: Pump tubes may be seriously damaged if the platens remain latched with the pump power off.
4. If the cartridge is to be stored away from the system or if it will not be used for a week or more, remove the reagent lines from the deionized water and pump the cartridge completely dry.
5. Turn off the gas supply if not being used.

10.5 Troubleshooting:

1. Don't overlook the obvious. Look for the simplest and most obvious cause for a particular problem or solution. Check for correct power to all modules and the power switches are on. Check for correct connection of all control and signal lines. Check tubing connections and flow through system.
2. Rule out operator induced errors. Consult the system manual and manuals for each application for proper operating procedures and protocols. Review test methodologies and flow diagrams to verify operation parameters.
3. Isolate and define the problem. Categorize the problem or symptom as one of the following:

Chemistry	Hydraulic	Electrical/Mechanical
Reagent	Pump tubing	Circuit components
Standards	Bubble size	Optics/Lamps
pH	Surfactant	Photometer/Detector
Temperature	Pump	Cabling

4. Eliminate one variable at a time. Using good experimentation techniques, change only one component or variable at a time and note the changes and results. In this manner, the problem may be cured or the solution more clearly defined.
5. Document the solution. Keep a log of your troubleshooting activity including problem, symptoms, causes, and solution. This information may be helpful for future troubleshooting sessions or for other users.
6. See manual for further trouble shooting solutions

11. PRECISIONANDBIAS

11.1 Single operator precision and bias were obtained from the analysis of quality control check samples. QC samples were obtained from NSI Solutions and were diluted according to manufactures directions. Table 3 summarizes the data.

12. REFERENCES

12.1 PerstorpEnviroflow3500OperationManuals, Perstorp Analytical Corporation, 1992.

12.2 MethodsforChemicalAnalysisofWaterandWaste, Method 350.1, EPA, 1983.

12.3 StandardMethodsfortheExaminationofWaterandWastewater, Method 417 C, "Determination of Nitrogen as Ammonia", 16th edition, 1985.

Table 1. Method Detection Limits and Concentration Ranges for Ammonium

Analyte	Method Detection Limit mg/L	Concentration Range mg/L
Ammonium	.001	0.01 - 1.00

Method Detection Limit: Sample Standard Deviation X Student's t value for one-tailed test at 99% confidence level with degrees of freedom = 9

Table 2. Suggested Calibration Standards for Ammonium Sample at Coweeta

Analyte	Calibration Standards mg/L
Ammonium	0.010, 0.05, 0.10, 0.50, 1.00

Table 3. Single Operator Precision and Bias for Ammonium determined from Quality Control Samples

Analyte	True Value mg/L	Number of Samples	Mean Measured mg/L	Mean Bias, mg/L	Standard Deviation, mg/L	Relative Standard Deviation, %
Ammonium	.029	15	.029	.000	.003	9.693

Relative Standard Deviation: 100 X (Sample Standard Deviation/Mean Value)

Table 4. Example of Sample ID table.

TABLE NUMBER: 1 TABLE NAME: M-NH4-RL CUP#

SAMPLEID		DIL	WGT	CUP#	SAMPLE ID	DIL	WGT
1	SYNC	1	1	2	W	1	1
3	S1	1	1	4	S1	1	1
5	S2	1	1	6	S2	1	1
7	S3	1	1	7	S3	1	1
9	S4	1	1	10	S4	1	1
11	S5	1	1	12	S5	1	1
13	CC	1	1	14	W	1	1
15	c1ad	1	1	16	c1as	1	1
17	c2ad	1	1	18	c2as	1	1
19	c3ad	1	1	20	c3as	1	1
21	c4ad	1	1	22	c4as	1	1
23	c5ad	1	1	24	c5as	1	1
25	c6ad	1	1	26	c6as	1	1
27	c7ad	1	1	28	c7as	1	1

Table 5. Example of Sampler/Channel Setup Table

501 Sampler Setup

SAMPLE TIME= [30]
WASH TIME= [35]
SAMPLER DATA CHANNELS= [2]
FIRST CHECK CALIBRANT POSITION= [13]
NUMBER OF CHECK CALIBRANTS= [1]
BASELINE CHECK INTERVAL= [20]
BASELINE CHECK DURATION= [1]
FIRST INSERTED BASELINE PRECEEDS CUP# [34]
REPLICATE COUNT FOR ALL CALIBRANTS= [1]
REPLICATE COUNT FOR ALL SAMPLES= [1]
OPERATOR VERIFICATION OF CALIBRATION Y/N [Y]
AUTO RERUN OF OFF-SCALE SAMPLES= [ON]
OF SAMPLES AFTER EACH OFF-SCALE TO RERUN= [1]
FIRST DILUTION FOR OFF-SCALES= [10]

Channel Setup

CHANNEL #= [2] CHANNEL
NAME= NH4-N START
IGNORE TIME= [65]
INITIAL BASELINE LEAD TIME= [65]
CORRECTIONS CODE Y/N [Y]
CYCLE TIME= [65]
COLLECTION RATE= [2] POINTS / SEC.
CHANNEL OFF-SCALE WARNING= [ON]
OFF-SCALE WARNING LIMIT= [25]
CHANNEL ZERO SCALE WARNING= [OFF]
INVERT RAW DATA? Y/N [N]
NOMINAL VALUE OF CHECK CAL= [.05]

PERCENT DEVIATION FROM NOMINAL= [16]
OUT OF RANGE LIMIT. PERCENT= [10]
CHECK CALIBRANT ID= [CC]

Table 6. Example of Standards Table

Calibration Code: 1
Units: ppm Channel #: 2
Calibration Mode: CF

S1	0	S11	0
S2	.01	S12	0
S3	.05	S13	0
S4	.1	S14	0
S5	.2	S15	0
S6	0	S16	0
S7	0	S17	0
S8	0	S18	0
S9	0	S19	0
S10	0	S20	0

Figure 1.

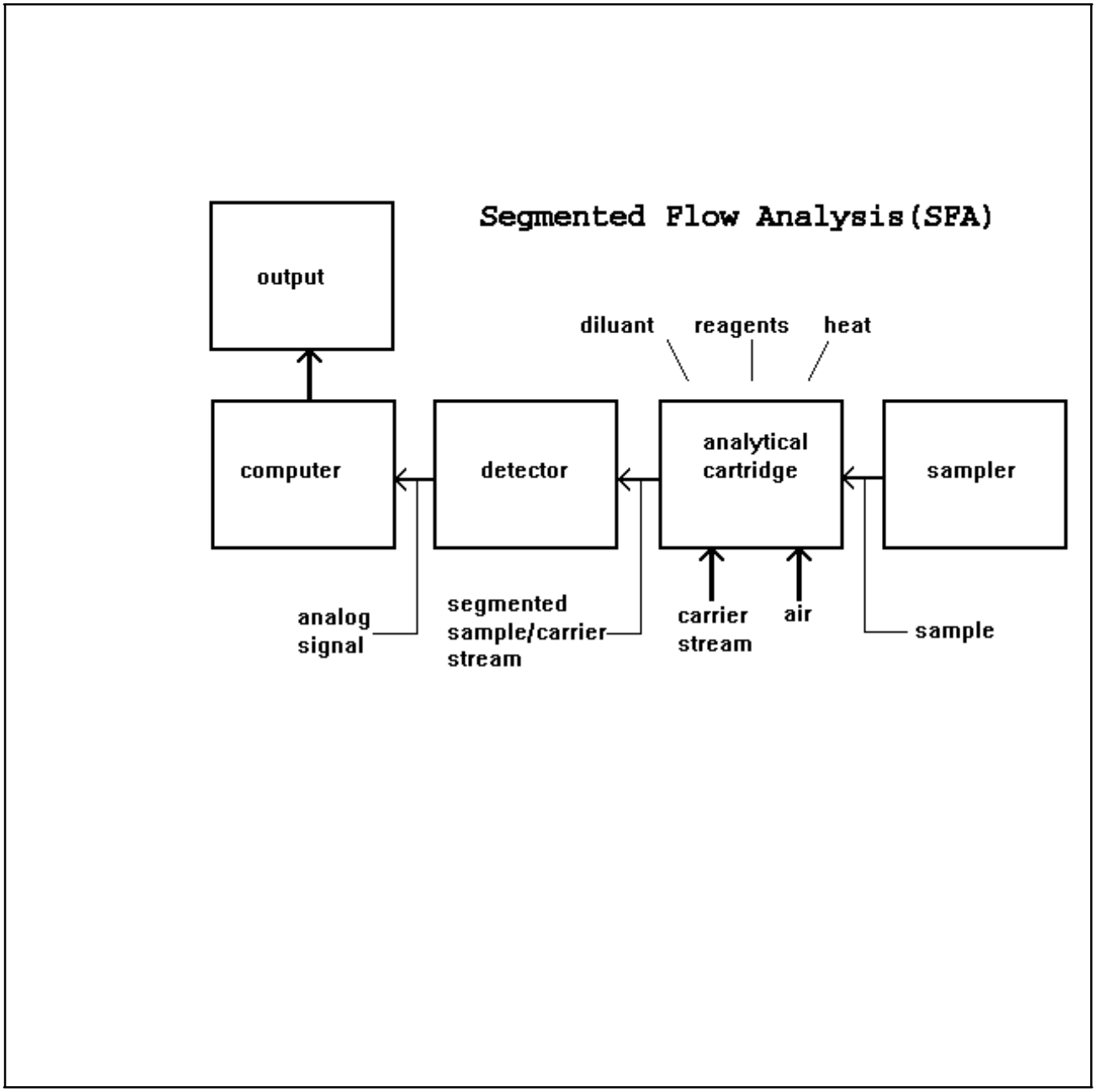
Segmented Flow Analysis(SFA)
output
diluant
reagents
heat
computer
detector
analytical cartridge
sampler
analog signal
segmented sample/carrier stream
carrier stream
air
sample

Frgure2

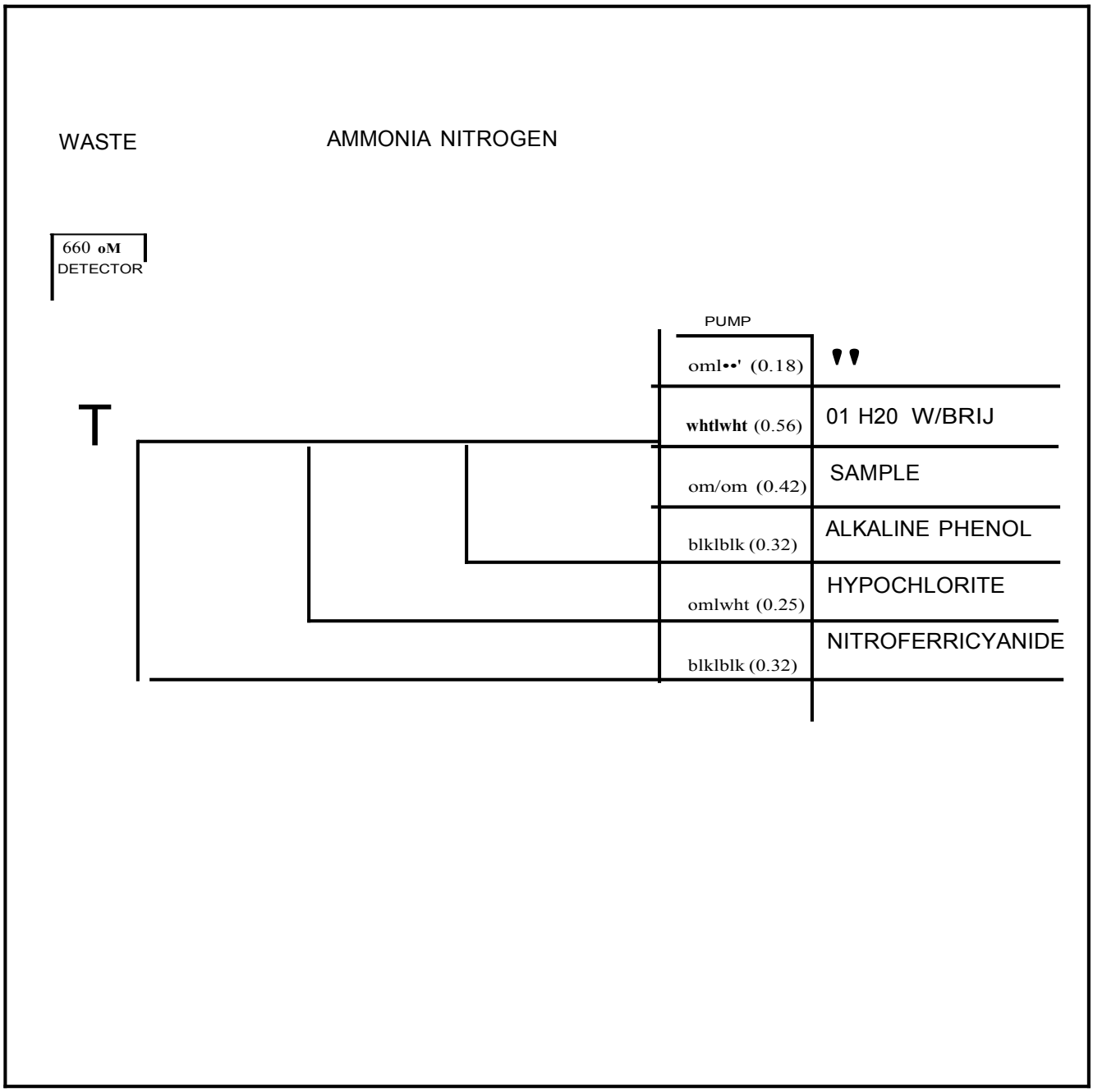
WASTE
AMMONIA NITROGEN
660 oM
DETECTOR
PUMP
T
oml•• ' (0.18)
whtlwht (0.56)
om/om (0.42)
blklblk (0.32)
omlwht (0.25)
blklblk (0.32)
01 H20 W/BRIJ
SAMPLE
ALKALINE PHENOL
HYPOCHLORITE
NITROFERRICYANIDE

Automated Wet Chemistry
Nitrate by Cadmium Reduction
using Perstorp by AlpKem

October 2009

Coweeta Hydrologic Lab
3160 Coweeta Lab Road
Otto, N.C. 28763

Sponsoring Agency: James M.

Vose, Project Leader U.S.

Forest Service
University of Georgia

Laboratory Manager:

Cindi Brown

Chemist:

Cindi Brown

Laboratory Technician:

Carol Harper
Neal Muldoon
Sheila Gregory

Instrument retired October 25, 2011

INDEX

AlpKem

Section Number	Subject
01	Scope and Application
02	Summary of Method
03	Definitions
04	Interferences
05	Safety
06	Apparatus and Equipment
07	Reagents and Consumable Materials
08	Calibration and Standardization
09	Quality Control
10	Procedure and Calculations
11	Precision and Bias
12	References

TABLES

1. Method Detection Limits.
2. Suggested Calibration Standards for Samples at Coweeta.
3. Single-Operator Precision and Bias for Nitrate determined from Quality Control Samples.
4. Example of Sample ID Table.
5. Example of Sampler/Channel Setup Table.
6. Example of Standards Table

FIGURES

1. System diagram for Perstorp 3500.
2. Manifold setup for Nitrate.

AlpKem

1. SCOPEANDAPPLICATION

1.1 This method is applicable to the determination of Nitrate in Stream, Precipitation, Thrufall, Lysimeter, and extracted soil samples.

1.2 Method detection limits are summarized in Table 1.

1.3 This method is not recommended for samples that are highly colored.

2. SUMMARYOFMETHOD

2.1 Samples are drawn from the automated sampler into a stream of reagents. Air bubbles are introduced to keep each sample discreet. Nitrate in the sample is reduced to Nitrite by passing through a cadmium coil reactor. The Nitrite then reacts with sulfanilamide and N-(1-naphthyl)-ethylenediamine dihydrochloride to form a highly colored azo dye. The reaction is measured at 520nm when the solution goes to the detector. The detector is a spectrometer that utilizes a flow cell to measure changes in transmitted light intensity. Beer's law correlates transmitted light intensity to the concentration of ions in the sample.

$\log(1/T) = abc$
where: T = transmittance
a = absorptivity
b = length of light path
c = concentration of ion (mg/L)

Calibration curves are constructed from a series of known standard concentrations. The concentration of the sample is calculated based on the calibration curve.

3. DEFINITIONS

3.1 Absorbance -- The measurement of the absorption of a particular wavelength of light as it passes through a liquid.

3.2 Colorimetry -- the measurement of light transmitted by a colored complex as a function of concentration.

3.3 Monochromator -- a detector which measures absorbance of light at specific wavelengths using a diffraction grating to select a specific wavelength of light.

3.4 Peristaltic Pump -- a pumping system which moves liquids by compressing flexible tubing between a solid surface (platen) and a roller.

3.5 Segmented Flow Analysis (SFA) -- a technique where the samples are separated by bubbles of a gas. The bubbles also help mix the reagents as they move through the manifold coils.

3.6 Transmittance -- The ratio of the radiant power transmitted by a sample to the radiant power incident on the sample

4. INTERFERENCES

4.1 Highly colored samples that absorb in the wavelength range of 520 - 540 nm can cause false positive readings. Samples at Coweeta are usually clear so this is no problem.

4.2 Samples high in turbidity must be filtered prior to analysis.

4.3 Samples high in iron or copper will need to be form a complex with EDTA.

4.4 Keep glassware that has been rinsed in HNO_3 separated for cations only.

5. SAFETY

5.1 Wear lab coat, gloves, and eye protection when using Hydrochloric Acid, Phosphoric Acid and Ammonium Hydroxide. Always work under a hood, vapors can be harmful.

5.2 Wear protective clothing when handling Cadmium coil.

5.3 When Cadmium coil has expired, store in tightly sealed container for later disposal at a hazardous waste treatment storage facility.

5.4 Wear protective clothing when working around the manifold, tubes could become clogged and pressure may increase enough to cause a tube to pop loose.

5.5 Read the lab safety plan and ask the lab safety officer if you have any questions.

6. APPARATUSANDEQUIPMENT

6.1 Perstorp Enviroflow 3500

6.1.1 Autosampler:
Perstorp model 501 is a 300 position random access sampler. It can be operated in manual or remote mode.

6.1.2 Dilutor:
Perstorp model 511 is an autodilutor interfaced to a computer. After a sample run is complete the computer recognizes peaks that have run above the highest calibration standard. The computer instructs the autosampler and the dilutor to rerun the off scale samples making a 10 X dilution.

6.1.3 Peristaltic Pump:
Perstorp model 502 is a multispeed peristaltic pump with individual platens for 24 tubing channels. Pump speed and tubing inside diameters determine the flow rates for the sample and reagents.

6.1.4 Mixing Manifolds:
Perstorp Supercartridge Jr. is a preconfigured mixing manifold for testing of Nitrate. The cartridge consist of polymeric tubing, fitting, reagent tees, coils and connectors.

6.1.5 Cartridge Heater:
Perstorp model 503 cartridge heater is a electronic digitally operated

temperature controller. It incorporates four heater cones to provide heat to Supercartridges when needed.

6.1.6 Detector:
Perstorp model 510 is a variable wavelength, flow through absorbance detector. Wavelength is selected by a user adjustable concave holographic grating. The detector can operate from 360 nm to 800 nm with a tungsten halogen lamp. Output from the detector is sent to the computer and digitized.

6.1.7 Computer Interface:
Analog signals from the detectors are processed by a 12 channel A/D board.

6.1.8 Computer Software:
Perstorp Softpac Plus software package allows user control of the autosampler, diluter, data acquisition, calculation of results and analog signal display. Analysis parameters are entered via on screen tables and a series of prompting menus. Reports are generated to printer or disk.

6.1.9 Computer:
System requires at least a Pentium 90hz microprocessor, 16 meg of ram, floppy disk drive, cd rom drive, 1gig hard drive, color monitor, printer, mouse, serial port, and parallel port.

7. REAGENTSANDCONSUMABLEMATERIALS

Prepare all reagents in Nitrate/Nitrite free DI water. Filter the Sulfanilamide color and Buffer reagent prior to use.

7.1 Stock Imidizole Buffer, 0.1M)
Dissolve 6.81g NHCH:NCH:CH in 900 mL DI water in 1L flask. Adjust the pH to 7.5 with concentrated Hydrochloric Acid (2.5 – 2.75ml). Transfer to polyethylene container. Solution is stable for one month. For soil resin sheets(acidic) a .01N NaOH solution replaces water in the buffer solution. (imidizole buffer solution, Bran-Luebbe procedure)

7.2 Color Reagent (250 mL)
Place stir bar in 250 mL flask with 200 mL of DI water. While stirring, add 25 mL of concentrated Phosphoric Acid H_3PO_4. Dissolve 10g of Sulfanilamide $C_6H_8N_2O_2S$ and .5g of N-1 Naphthylethylendiamine Dihydrochloride $C_{12}H_{14}N_2 \cdot 2HCl$ and dilute to 250 mL with DI water. Store reagent in dark polyethylene bottle at 4° C. Reagent is stable for two weeks.

7.3 .5N Hydrochloric Acid (250 mL)
Add 10.4 mL concentrated Hydrochloric Acid HCl to 200 mL DI water in volumetric flask. Mix well and dilute to final volume of 250 mL with DI water.

7.4 Copper Sulfate, 0.01M (500 mL)
Dissolve 1.25g of Copper Sulfate $CuSO_4 \cdot 5H_2O$ in 400 mL DI water and dilute to 500 mL.

7.5 DI water with Brij - 35, 30% w/v (250 mL)
Add 3 drops of Brij - 35 to 250 mL of DI water. This is used as the diluent and as the startup solution. Use a .4N HCl solution for the sampler wash when running soil resin sheet extractions.

8. CALIBRATIONANDSTANDARDIZATION

8.1 Anion calibrants, 1000mg/L are purchased from Ricca yearly.

8.2 Working Standards:
Nitrate: .010 mg/L, .050 mg/L, .100 mg/L, .200 mg/L. For N-Min samples, make standards in 2M KCl and use volumetric flask for dilutions. For soil resin sheets, make standards in .4N HCl acid.

9. QUALITYCONTROL

9.1 Deionized water blanks are poured up weekly with the DWS samples. These serve as a check on the DI water system, and the bottle washing. A random sample of washed bottles are checked with a conductivity meter and any reading above 1.0 μmho indicates that set of bottles needs to be rinsed again. DI water blanks are also poured up for the Al collection. Blanks are taken into the field and treated as samples. Another check of the DI system is weekly measurements of the DI conductivity, when the NADP sample is measured. Any reading above 1.0 μmho indicates a dirty cartridge and the cation exchange cartridges are changed.

9.2 Stock solutions are made up or purchased yearly. Two aliquots are set aside in order to check the stock concentration if necessary.

9.3 QC concentrates from NSI are sent to the lab quarterly. They are analyzed for SO_4, Cl, NO_3, NH_4, PO_4, and TKN. A value within the 95% C.I. is considered acceptable. Samples are run in triplicate. X bar charts will be used for these results. See Standard Methods, 1989. Perkin-Elmer cation concentrate (Alternate Metals II) is used to check the Atomic Absorption Spectrophotometer. It is purchased yearly.

9.4 A standard curve is determined before every analysis with the Perstorp 3500. R squared must equal 0.98 or greater before samples are analyzed.

9.5 Daily QC checks are done with solutions made from the ERA concentrates. Acceptable range for each ion are based on 95% confidence limits.

9.6 Check limits of detection annually for all instruments.

9.7 Check calibration of balances twice a year.

10. PROCEDUREANDCALCULATIONS

10.1 Startup:
1. Make up reagents and standards.
2. Configure pump with proper tubes and connect to Nitrate cartridge.
3 Turn power on and apply tension to pump platens.
4. Connect all lines to H_2O and surfactant and observe stream.
5. Connect reagent lines and observe stream.

10.2 Computer and Sampler startup:
1. Turn power on and run Winflow program.
2. Select and click the Sample Table button.
3. Edit an existing table or create a new one. Table should start with highest calibration standard (SYNC) sample followed by the lowest sample for carry over correction (CO) then a read baseline (RB).
4. Calibration standards are next with duplicates from highest to lowest. Include QC

standard after calibration standards and RB. Insert calibration verification (mid-range standard) after each 20 samples. For each sample cup indicate: location, sample ID, type, dilution, and weight.

5. Rename, save and print the sample table.
6. Click the Method Editor button and load an existing Methods file or create a new file.
7. Verify all setting are correct. Refer to a previous method or the help files.
8. Select the Data Collect button and verify or select Method and Sample Table in Run Setup.
9. Enter an Operator ID and verify or enter a Filename for the run.
   Click on the Play button and monitor the baseline. Purge diluter if Method calls for it. When the baseline is stable on startup solution (water) then switch to reagents. Allow a few minutes for reagents to equilibrate and monitor for a steady baseline.

10.3 Calibration:

1. Load sampler in this order: SYNC (highest standard), water, standards (duplicates - lowest to highest), water, samples, water.
2. Computer will signal operator to review calibration curve after standards have run. Calibration curve should yield a r2 value greater than .98. Edit calibration curve if needed and return to data collection screen.

10.4 Sample run:

1. When a stable baseline has been achieved use the Sample Table print out to start loading the sample trays.
2. Click the Fast Forward Start button to start data collection and sampler.
3. Monitor the run until the SYNC peak has eluted and successfully marked the top of the peak at it's steady state. Allow the run to continue. If run stops automatically then data file will be saved. If the run is stopped manually by clicking the Stop button then be sure to save the results once the completed run is displayed.
4. Review the results. Calibration curve should yield an r^2 value greater than .98.
5. Reports are produced by opening the File window and selecting the proper option. Reports may be edited, printed, and exported as needed.

10.5 Shutdown:

1. Connect all reagent lines to deionized water.
2. Pump deionized water through the system for 15-20 minutes.
3. Turn off the 509 power and unlatch all pump platens. Caution: Pump tubes may be seriously damaged if the platens remain latched with the pump power off.
4. If the cartridge is to be stored away from the system or if it will not be used for a week or more, remove the reagent lines from the deionized water and pump the cartridge completely dry.
5. Turn off the gas supply if not being used.

10.6 Troubleshooting:

1. Don't overlook the obvious. Look for the simplest and most obvious cause for a particular problem or solution. Check for correct power to all modules and the power switches are on. Check for correct connection of all control and signal lines. Check tubing connections and flow through system.
2. Rule out operator induced errors. Consult the system manual and manuals for each application for proper operating procedures and protocols. Review test methodologies and flow diagrams to verify operation parameters.

3. Isolate and define the problem. Categorize the problem or symptom as one of the following:

Chemistry	Hydraulic	Electrical/Mechanical
Reagent	Pump tubing	Circuit components
Standards	Bubble size	Optics/Lamps
pH	Surfactant	Photometer/Detector
Temperature	Pump	Cabling

4. Eliminate one variable at a time. Using good experimentation techniques change only one component or variable at a time and note the changes and results. In this manner, the problem may be cured or the solution more clearly defined.
5. Document the solution. Keep a log of your troubleshooting activity including problem, symptoms, causes, and solution. This information may be helpful for future troubleshooting sessions or for other users.

6. See operation manual for further trouble shooting solutions.

11. PRECISIONANDBIAS

11.1 Single operator precision and bias were obtained from the analysis of quality control check samples. QC samples were obtained from NSI Solutions and were diluted according to manufactures directions. Table 3 summarizes the data.

12. REFERENCES

12.1 PerstorpEnviroflow3500OperationManuals, Perstorp Analytical Corporation, 1992.
12.2 MethodsforChemicalAnalysisofWaterandWaste, Method 353.2, EPA, 1983.

12.3 StandardMethodsfortheExaminationofWaterandWastewater, Method 418 F, "Determination of Nitrate/Nitrite by Automated Cadmium Reduction", 16th edition, 1985.

Table 1. Method Detection Limits and Concentration Ranges for Nitrate

Analyte	Method Detection Limit mg/L	Concentration Range mg/L
Nitrate	.004	0.01 - 1.00

Method Detection Limit: Sample Standard Deviation X Student's t value for one-tailed test at 99% confidence level with degrees of freedom = 9

Table 2. Suggested Calibration Standards for Nitrate Sample at Coweeta

Analyte	Calibration Standards mg/L
Nitrate	0.010, 0.05, 0.10, 0.50, 1.00

Table 3. Single Operator Precision and Bias for Nitrate determined from Quality Control Samples

Analyte	True Value mg/L	Number of Samples	Mean Measured mg/L	Mean Bias, mg/L	Standard Deviation, mg/L	Relative Standard Deviation, %
Nitrate	.050	10	.049	.001	.001	7.753

Relative Standard Deviation: 100 X (Sample Standard Deviation/Mean Value)
Mean Bias: Sum of bias for each sample/number of replicates

Table 4. Example of Sample ID table.

TABLE NUMBER: 1 TABLE NAME: M-NO3-RL CUP#

SAMPLEID		DIL	WGT	CUP#	SAMPLE ID	DIL	WGT
1	SYNC	1	1	2	W	1	1
3	S1	1	1	4	S1	1	1
5	S2	1	1	6	S2	1	1
7	S3	1	1	7	S3	1	1
9	S4	1	1	10	S4	1	1
11	S5	1	1	12	S5	1	1
13	CC	1	1	14	W	1	1
15	c1ad	1	1	16	c1as	1	1
17	c2ad	1	1	18	c2as	1	1
19	c3ad	1	1	20	c3as	1	1
21	c4ad	1	1	22	c4as	1	1
23	c5ad	1	1	24	c5as	1	1
25	c6ad	1	1	26	c6as	1	1
27	c7ad	1	1	28	c7as	1	1

Table 5. Example of Sampler/Channel Setup Table

501 Sampler Setup

SAMPLE TIME= [35]
WASH TIME= [35]
SAMPLER DATA CHANNELS= [1]
FIRST CHECK CALIBRANT POSITION= [13]
NUMBER OF CHECK CALIBRANTS= [1]
BASELINE CHECK INTERVAL= [20]
BASELINE CHECK DURATION= [1]
FIRST INSERTED BASELINE PRECEEDS CUP# [34]
REPLICATE COUNT FOR ALL CALIBRANTS= [1]
REPLICATE COUNT FOR ALL SAMPLES= [1]
OPERATOR VERIFICATION OF CALIBRATION Y/N [Y]
AUTO RERUN OF OFF-SCALE SAMPLES= [ON]
OF SAMPLES AFTER EACH OFF-SCALE TO RERUN= [1]
FIRST DILUTION FOR OFF-SCALES= [10]

Channel Setup

CHANNEL #= [1] CHANNEL
NAME= NO3-N START
IGNORE TIME= [70]
INITIAL BASELINE LEAD TIME= [70]
CORRECTIONS CODE Y/N [Y]
CYCLE TIME= [70]
COLLECTION RATE= [2] POINTS / SEC.
CHANNEL OFF-SCALE WARNING= [ON]
OFF-SCALE WARNING LIMIT= [100]
CHANNEL ZERO SCALE WARNING= [OFF]

INVERT RAW DATA? Y/N [N]
NOMINAL VALUE OF CHECK CAL= [.055]
PERCENT DEVIATION FROM NOMINAL= [11]
OUT OF RANGE LIMIT. PERCENT= [10]
CHECK CALIBRANT ID= [CC]

Table 6. Example of Standards Table

Calibration Code: 1
Units: ppm Channel #: 1
Calibration Mode: CF

S1	0	S11	0
S2	.01	S12	0
S3	.05	S13	0
S4	.1	S14	0
S5	.2	S15	0
S6	0	S16	0
S7	0	S17	0
S8	0	S18	0
S9	0	S19	0
S10	0	S20	0

Figure 1.

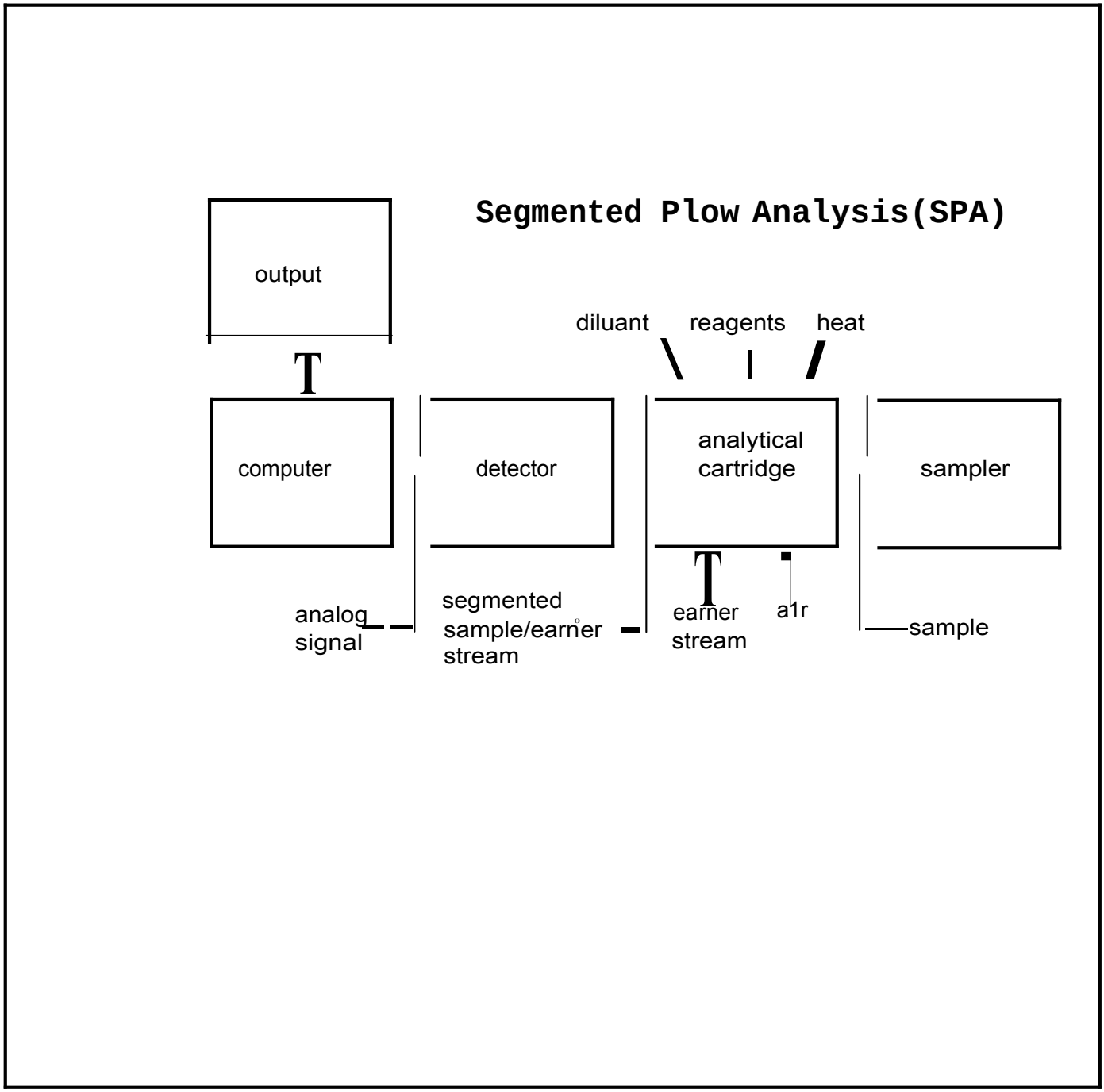
Segmented Plow Analysis(SPA)
output
diluant
reagents
heat
computer
detector
analytical cartridge
sampler
analog signal
segmented sample/earner stream
earner stream
a1r
sample

Figure 2.

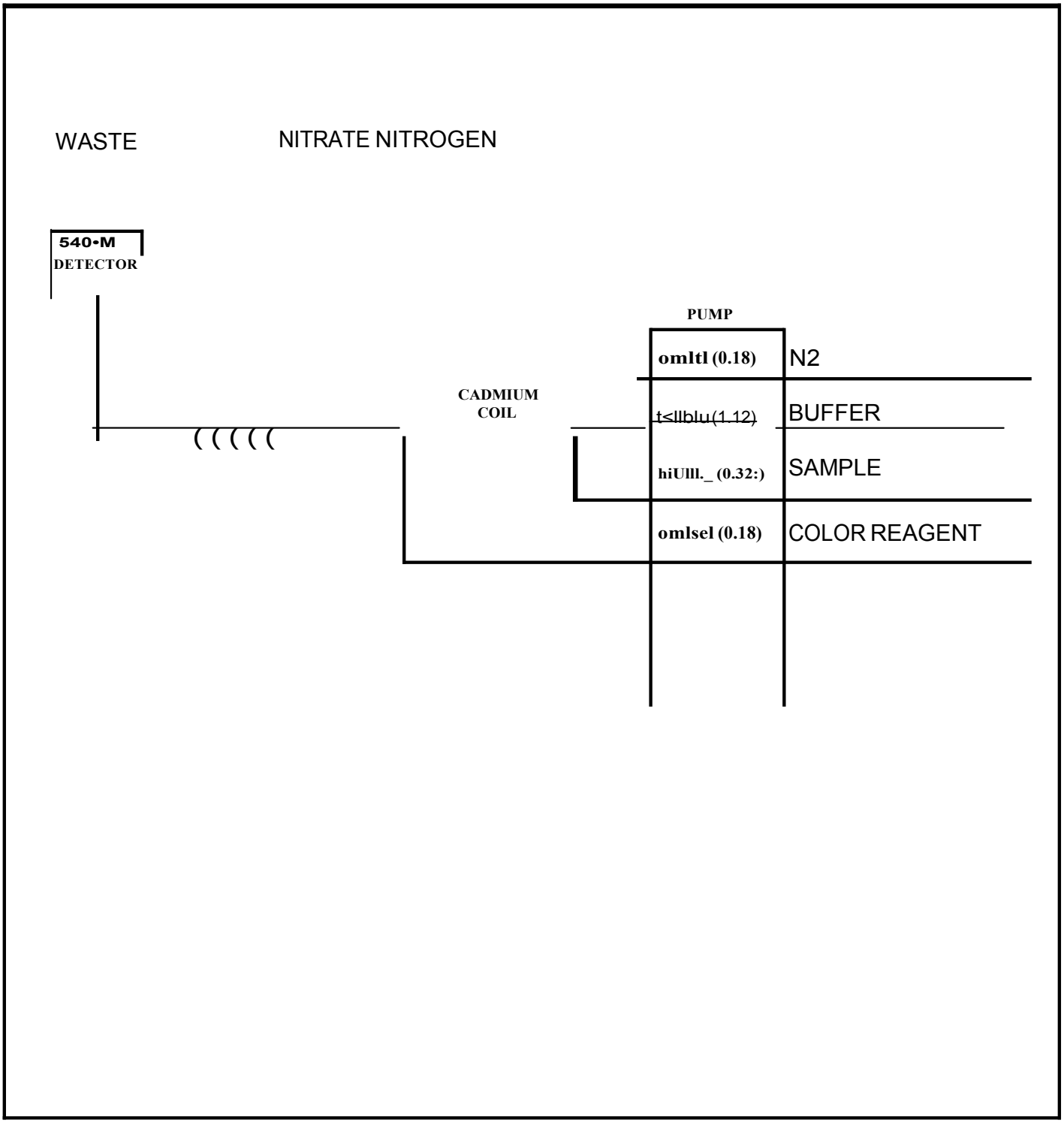
WASTE
NITRATE NITROGEN
540•M
DETECTOR
PUMP
omltl (0.18)
N2
CADMIUM
COIL
t<llblu (1.12)
BUFFER
hiUlll._ (0.32:)
SAMPLE
omlsel (0.18)
COLOR REAGENT

Automated Wet Chemistry
for Orthophosphate
using Perstorp by AlpKem

October 2009

Coweeta Hydrologic Lab
3160 Coweeta Lab Road
Otto, N.C. 28763

Sponsoring Agency: James M.

Vose, Project Leader U.S.

Forest Service
University of Georgia

Laboratory Manager:

Cindi Brown

Chemist:

Cindi Brown

Laboratory Technician:

Carol Harper
Neal Muldoon
Sheila Gregory

Instrument retired October 25, 2011

INDEX

I. AlpKem

Section Number	Subject
01	Scope and Application
02	Summary of Method
03	Definitions
04	Interferences
05	Safety
06	Apparatus and Equipment
07	Reagents and Consumable Materials
08	Calibration and Standardization
09	Quality Control
10	Procedure and Calculations
11	Precision and Bias
12	References

TABLES

1. Method Detection Limits.
2. Suggested Calibration Standards for Samples at Coweeta.
3. Single-Operator Precision and Bias for Orthophosphate determined from Quality Control Samples. (high range)
4. Single-Operator Precision and Bias for Orthophosphate determined from Quality Control Samples. (low range)
5. Example of Sample ID Table.
6. Example of Sampler/Channel Setup Table.
7. Example of Standards Table

FIGURES

1. System diagram for Perstorp 3500.
2. Manifold setup for Orthophosphate.

1. SCOPEANDAPPLICATION

1.1 This method is applicable to the determination of Orthophosphate in Stream, Precipitation, Thrufall, Lysimeter, and extracted soil samples.

1.2 Orthophosphate measured by this method is Total Reactive Phosphorus. Refer to section 424 in Standard Methods for the Examination of Water and Wastewater for further information on fractions of Phosphorus.

1.3 Method detection limits are summarized in Table 1.

2. SUMMARYOFMETHOD

2.1 Samples are drawn from the automated sampler into a stream of reagents. Air bubbles are introduced to keep each sample discreet. Orthophosphate in the sample reacts with Ammonium Molybdate $(NH_4)_6Mo_7O_{24} \cdot 4H_2O$ and Antimony Potassium Tartrate $K(SbO)C_4H_4O_6 \cdot {}^1/_2H_2O$ in acid media to form an Antimony-phosphomolybdate complex. The complex is reduced with Ascorbic Acid $C_6H_8O_6$ to form a blue color that is measured at 660nm when the solution goes to the detector. The detector is a spectrometer that utilizes a flow cell to measure changes in transmitted light intensity. Beer's law correlates transmitted light intensity to the concentration of ions in the sample.

$\log(1/T) = abc$
where: T = transmittance
a = absorptivity
b = length of light path
c = concentration of ion (mg/L)

Calibration curves are constructed from a series of known standard concentrations. The concentration of the sample is calculated based on the calibration curve.

3. DEFINITIONS

3.1 Absorbance -- The measurement of the absorption of a particular wavelength of light as it passes through a liquid.

3.2 Colorimetry -- the measurement of light transmitted by a colored complex as a function of concentration.

3.3 Monochromator -- a detector which measures absorbance of light at specific wavelengths using a diffraction grating to select a specific wavelength of light.

3.4 Peristaltic Pump -- a pumping system which moves liquids by compressing flexible tubing between a solid surface (platen) and a roller.

3.5 Segmented Flow Analysis (SFA) -- a technique where the samples are separated by bubbles of a gas. The bubbles also help mix the reagents as they move through the manifold coils.

3.6 Transmittance -- The ratio of the radiant power transmitted by a sample to the radiant power incident on the sample

4. INTERFERENCES

4.1 Highly colored samples that absorb in the wavelength range of 640 - 660nm can cause false positive readings. Samples from coastal waters can present problems.

4.2 Samples high in turbidity must be filtered prior to analysis.

4.3 Silica concentrations greater than 10mg/L can cause positive interference. SiO_2 concentrations of 20mg/L would cause .005mg/L positive readings. Samples at Coweeta run below 20mg/L.

5. SAFETY

5.1 Wear lab coat, gloves, and eye protection when using Sulfuric Acid, Antimony Potassium Tartrate, and Ammonium Molybdate. Always work under a hood, vapors can be harmful.

5.4 Wear protective clothing when working around the manifold, tubes could become clogged and pressure may increase enough to cause a tube to pop loose.

5.5 Read the lab safety plan and ask the lab safety officer if you have any questions.

6. APPARATUSANDEQUIPMENT

6.1 Perstorp Enviroflow 3500

6.1.1 Autosampler:
Perstorp model 501 is a 300 position random access sampler. It can be operated in manual or remote mode.

6.1.2 Dilutor:
Perstorp model 511 is a autodilutor interfaced to a computer. After a sample run is complete the computer recognizes peaks that have run above the highest calibration standard. The computer instructs the autosampler and the dilutor to rerun the off scale samples making a 10 X dilution.

6.1.3 Peristaltic Pump:
Perstorp model 502 is a multispeed peristaltic pump with individual platens for 24 tubing channels. Pump speed and tubing inside diameters determine the flow rates for the sample and reagents.

6.1.4 Mixing Manifolds:
Perstorp Supercartridge Jr. is a preconfigured mixing manifold for testing of Nitrate. The cartridge consist of polymeric tubing, fitting, reagent tees, coils and connectors.

6.1.5 Cartridge Heater:
Perstorp model 503 cartridge heater is a electronic digitally operated temperature controller. It incorporates four heater cones to provide heat to Supercartridges when needed.

6.1.6 Detector:
Perstorp model 510 is a variable wavelength, flow through absorbance detector. Wavelength is selected by a user adjustable concave holographic grating. The detector can operate from 360 nm to 800 nm with a tungsten halogen lamp. Output

from the detector is sent to the computer and digitized.

6.1.7 Computer Interface:
Analog signals from the detectors are processed by a ER interface.

6.1.8 Computer Software:
Perstorp Winflow software package allows user control of the autosampler, diluter, data acquisition, calculation of results and analog signal display. Analysis parameters are entered via on screen tables and a series of prompting menus. Reports are generated to printer or disk.

6.1.9 Computer:
System requires at least a Pentium 90hz microprocessor, 16 meg of ram, floppy disk drive, cd rom drive, 1gig hard drive, color monitor, printer, mouse, serial port, and parallel port.

7. REAGENTSANDCONSUMABLEMATERIALS

Prepare all reagents in Phosphate free DI water. Filter the all reagents prior to use.

7.1 Sulfuric Acid, .5N (250 mL)
Add 35 mL of concentrated Sulfuric Acid H_2SO_4 to 200 mL of DI water. Mix well and dilute to final volume of 250 mL.

7.2 Stock Ammonium Molydate Reagent (250 mL)
Dissolve 10g of Ammonium Molybdate $(NH_4)_6Mo_7O_{24} \cdot 4H_2O$ in 200 mL of DI water. Dilute to 250 mL with DI water. Store reagent in dark polyethylene bottle at 4° C. Reagent is not stable for more than two days. If reagent turns a faint blue, then remake.

7.3 Stock Antimony Potassium Tartrate (250mL)
Dissolve .75g of Antimony Potassium Tartrate $K(SbO)C_4H_4O_6 \cdot {}^1/_2 2H_2O$ in 200 mL of DI water. Mix well and dlute to 250 mL with DI water. Store in a plastic bottle at 4^oC for no more than one week.

7.4 Acorbic Acid (250 mL)
Dissolve 4.4g of Ascorbic Acid $C_6H_8O_6$ in 200mL DI water with 12.5 mL of Acetone. Dilute to 250 mL with DI water. Store in a plastic bottle at 4^oC for no more than one week.

7.5 Color Reagent (200 mL)
Stock Sulfuric acid, 5N----------100mL
Stock Antimony Potassium Tartrate Solution--------10mL
Stock Ammonium Molybdate Solution----------30mL
Stock Ascorbic Acid Solution----------60mL
Dowfax 2A1----------0.5mL

Add reagents in the order stated and mix after each addition. This will prevent the ascorbic acid from turning a darker color when the solution is first made. Prepare reagent daily.

8. CALIBRATIONANDSTANDARDIZATION

8.1 Anion calibrants are 1000mg/L purchased from Ricca yearly.
8.2 Working Standards:
For Coweeta samples: .010 mg/L, .050 mg/L, .100 mg/L, .200 mg/L
For Double Acid Extraction samples: 5.0mg/L, 10.0mg/L, 20.0mg/L, 30.0mg/L

9. QUALITYCONTROL

9.1 Deionized water blanks are poured up weekly with the DWS samples. These serve as a check on the DI water system, and the bottle washing. A random sample of washed bottles are checked with a conductivity meter and any reading above 1.0 μmho indicates that set of bottles needs to be rinsed again. DI water blanks are also poured up for the Al collection. Blanks are taken into the field and treated as samples. Another check of the DI system is weekly measurements of the DI conductivity, when the NADP sample is measured. Any reading above 1.0 μmho indicates a dirty cartridge and the cation exchange cartridges are changed.

9.2 Stock solutions are made up or purchased yearly. Two aliquots are set aside in order to check the stock concentration if necessary.

9.3 QC concentrates from NSI are sent to the lab quarterly. They are analyzed for SO_4, Cl, NO_3, NH_4, PO_4, and TKN. A value within the 95% C.I. is considered acceptable. Samples are run in triplicate. X bar charts will be used for these results. See Standard Methods, 1989. Perkin-Elmer cation concentrate (Alternate Metals II) is used to check the Atomic Absorption Spectrophotometer. It is purchased yearly.

9.4 A standard curve is determined before every analysis with the Perstorp 3500. R squared must equal 0.98 or greater before samples are analyzed.

9.5 Daily QC checks are done with solutions made from the NSI concentrates. Acceptable ranges for each ion are based on 95% confidence limits.

9.6 Check limits of detection annually for all instruments.

9.7 Check calibration of balances twice a year.

10. PROCEDUREANDCALCULATIONS

10.1 Startup:

1. Make up reagents and standards.
2. Configure pump with proper tubes and connect to Silicate cartridge.
3 Turn power on and apply tension to pump platens.
4. Connect all lines to H_2O and surfactant and observe stream.
5. Connect reagent lines and observe stream.

10.2 Computer and Sampler startup:

1. Turn power on and run Winflow program.
2. Select and click the Sample Table button. Edit an existing table or create a new one. Table should start with highest calibration standard (SYNC) sample followed by the lowest sample for carry over correction (CO) then a read baseline (RB). Calibration standards are next with duplicates from highest to lowest. Include QC standard after calibration standards and RB. Insert calibration verification (mid-range standard) after each 20 samples. For each sample cup indicate: location, sample ID, type, dilution, and weight. Rename, save and print the sample table.
5. Click the Method Editor button and load an existing Methods file or create a new file. Verify all settings are correct. Refer to a previous method or the help files.
6. Select the Data Collect button and verify or select Method and Sample Table in Run Setup. Start pump with reagents tubes in surfactant water.

5. Enter an Operator ID and verify or enter a Filename for the run.
6. Click on the Play button and monitor the baseline. When the baseline is stable, put tubes in water then switch to reagents. Allow a few minutes for reagents to equilibrate and monitor for a steady baseline.

10.3 Sample run:

1. When a stable baseline has been achieved use the Sample Table print out to start loading the sample trays.
2. Click the Fast Forward Start button to start data collection and sampler.
3. Monitor the run until the SYNC peak has eluted and successfully marked the top of the peak at its steady state. Allow the run to continue. If run stops automatically then data file will be saved. If the run is stopped manually by clicking the Stop button then be sure to save the results once the completed run is displayed.
4. Review the results. Calibration curve should yield an r^2 value greater than .98.
5. Reports are produced by opening the File window and selecting the proper option. Reports may be edited, printed, and exported as needed.

10.4 Shutdown:

1. Connect all reagent lines to deionized water.
2. Pump deionized water through the system for 15-20 minutes.
3. Turn off the 509 power and unlatch all pump platens. Caution: Pump tubes may be seriously damaged if the platens remain latched with pump power off.
4. If the cartridge is to be stored away from the system or if it will not be used for a week or more, remove the reagent lines from the deionized water and pump the cartridge completely dry.
5. Turn off the gas supply if not being used.

10.5 Troubleshooting:

1. Don't overlook the obvious. Look for the simplest and most obvious cause for a particular problem or solution. Check for correct power to all modules and the power switches are on. Check for correct connection of all control and signal lines. Check tubing connections and flow through system.
2. Rule out operator induced errors. Consult the system manual and manuals for each application for proper operating procedures and protocols. Review test methodologies and flow diagrams to verify operation parameters.
3. Isolate and define the problem. Categorize the problem or symptom as one of the following:

Chemistry	Hydraulic	Electrical/Mechanical
Reagent	Pump tubing	Circuit components
Standards	Bubble size	Optics/Lamps
pH	Surfactant	Photometer/Detector
Temperature	Pump	Cabling

4. Eliminate one variable at a time. Using good experimentation techniques, change only one component or variable at a time and note the changes and results. In this manner, the problem may be cured or the solution more clearly defined.
5. Document the solution. Keep a log of your troubleshooting activity including problem, symptoms, causes, and solution. This information may be helpful for future troubleshooting sessions or for other users.
6. See operation manual for further trouble shooting solutions.

11. PRECISIONANDBIAS

11.1 Single operator precision and bias were obtained from the analysis of quality control check samples. QC samples were obtained from NSI Solutions and were diluted according to manufactures directions. Tables 3 and 4 summarize the data.

12. REFERENCES

12.1 PerstorpEnviroflow3500OperationManuals, Perstorp Analytical Corporation, 1992.

12.2 StandardMethodsfortheExaminationofWaterandWastewater, Method 424 G, "Determination of Phosphorus by Automated Wet Chemistry", 16th edition, 1985.

12.3 MethodsforChemicalAnalysisofWaterandWaste, Method 365.3, EPA, 1983.

Table 1. Method Detection Limits and Concentration Ranges for Orthophosphate

Analyte	Method Detection Limit mg/L	Concentration Range mg/L
Orthophosphate	.015	0.01 - 1.00

Method Detection Limit: Sample Standard Deviation X Student's t value for one-tailed test at 99% confidence level with degrees of freedom = 9

Table 2. Suggested Calibration Standards for Orthophosphate Sample at Coweeta

Analyte	Calibration Standards mg/L
Orthophosphate -- high range	5.0, 10.0, 20.0, 30.0
Orthophosphate -- low range	0.010, 0.05, 0.10, 0.50, 1.00

Table 3. Single Operator Precision and Bias for Orthophosphate determined from Standards (high)

Analyte	True Value mg/L	Number of Samples	Mean Measured mg/L	Mean Bias, mg/L	Standard Deviation, mg/L	Relative Standard Deviation, %
Orthophosphate	11.30	8	11.95	.65	.24	2.01

Relative Standard Deviation: 100 X (Sample Standard Deviation/Mean Value)
Mean Bias: Sum of bias for each sample/number of replicates

Table 4. Single Operator Precision and Bias for Orthophosphate determined from Standards (low)

Analyte	True Value mg/L	Number of Samples	Mean Measured mg/L	Mean Bias, mg/L	Standard Deviation, mg/L	Relative Standard Deviation, %
Orthophosphate	.113	9	.119	.006	.005	3.85

Table 5. Example of Sample ID table.

TABLE NUMBER: 1 TABLE NAME: M-O-PO4-RL CUP#

SAMPLEID		DIL	WGT	CUP#	SAMPLE ID	DIL	WGT
1	SYNC	1	1	2	W	1	1
3	S1	1	1	4	S1	1	1
5	S2	1	1	6	S2	1	1
7	S3	1	1	7	S3	1	1
9	S4	1	1	10	S4	1	1
11	S5	1	1	12	S5	1	1
13	CC	1	1	14	W	1	1
15	c1ad	1	1	16	c1as	1	1
17	c2ad	1	1	18	c2as	1	1
19	c3ad	1	1	20	c3as	1	1
21	c4ad	1	1	22	c4as	1	1
23	c5ad	1	1	24	c5as	1	1
25	c6ad	1	1	26	c6as	1	1
27	c7ad	1	1	28	c7as	1	1

Table 6. Example of Sampler/Channel Setup Table

501 Sampler Setup

SAMPLE TIME= [30]
WASH TIME= [35]
SAMPLER DATA CHANNELS= [1]
FIRST CHECK CALIBRANT POSITION= [15]
NUMBER OF CHECK CALIBRANTS= [1]
BASELINE CHECK INTERVAL= [15]
BASELINE CHECK DURATION= [1]
FIRST INSERTED BASELINE PRECEEDS CUP# [29]
REPLICATE COUNT FOR ALL CALIBRANTS= [1]
REPLICATE COUNT FOR ALL SAMPLES= [1]
OPERATOR VERIFICATION OF CALIBRATION Y/N [Y]
AUTO RERUN OF OFF-SCALE SAMPLES= [ON]
OF SAMPLES AFTER EACH OFF-SCALE TO RERUN= [1]
FIRST DILUTION FOR OFF-SCALES= [10]

Channel Setup

CHANNEL #= [1]
CHANNEL NAME= O-PO4
START IGNORE TIME= [65]
INITIAL BASELINE LEAD TIME= [65]
CORRECTIONS CODE Y/N [Y]
CYCLE TIME= [65]
COLLECTION RATE= [2] POINTS / SEC.
CHANNEL OFF-SCALE WARNING= [ON]
OFF-SCALE WARNING LIMIT= [100]
CHANNEL ZERO SCALE WARNING= [OFF]
INVERT RAW DATA? Y/N [N]
NOMINAL VALUE OF CHECK CAL= [.055]
PERCENT DEVIATION FROM NOMINAL= [11]
OUT OF RANGE LIMIT. PERCENT= [10]
CHECK CALIBRANT ID= [CC]

Table 7. Example of Standards Table

Calibration Code: 1
Units: ppm Channel #: 1
Calibration Mode: CF

S1	.05	S11	0
S2	.2	S12	0
S3	.5	S13	0
S4	1	S14	0
S5	3	S15	0
S6	0	S16	0
S7	0	S17	0
S8	0	S18	0
S9	0	S19	0
S10	0	S20	0

Figure 1.

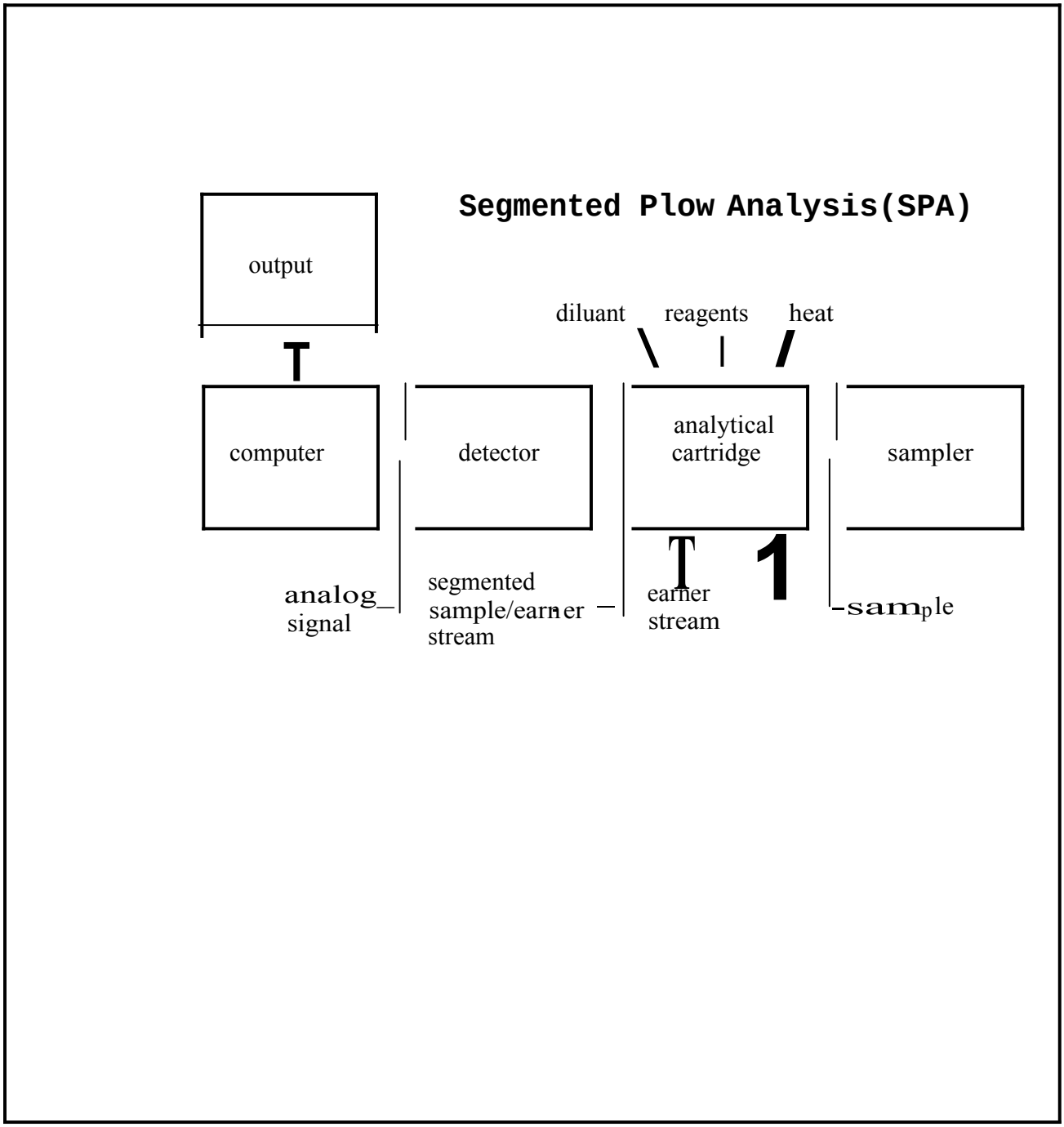
Segmented Plow Analysis(SPA)
output
diluant
reagents
heat
computer
detector
analytical cartridge
sampler
analog signal
segmented sample/earner stream
earner stream
sample

Figure 2.

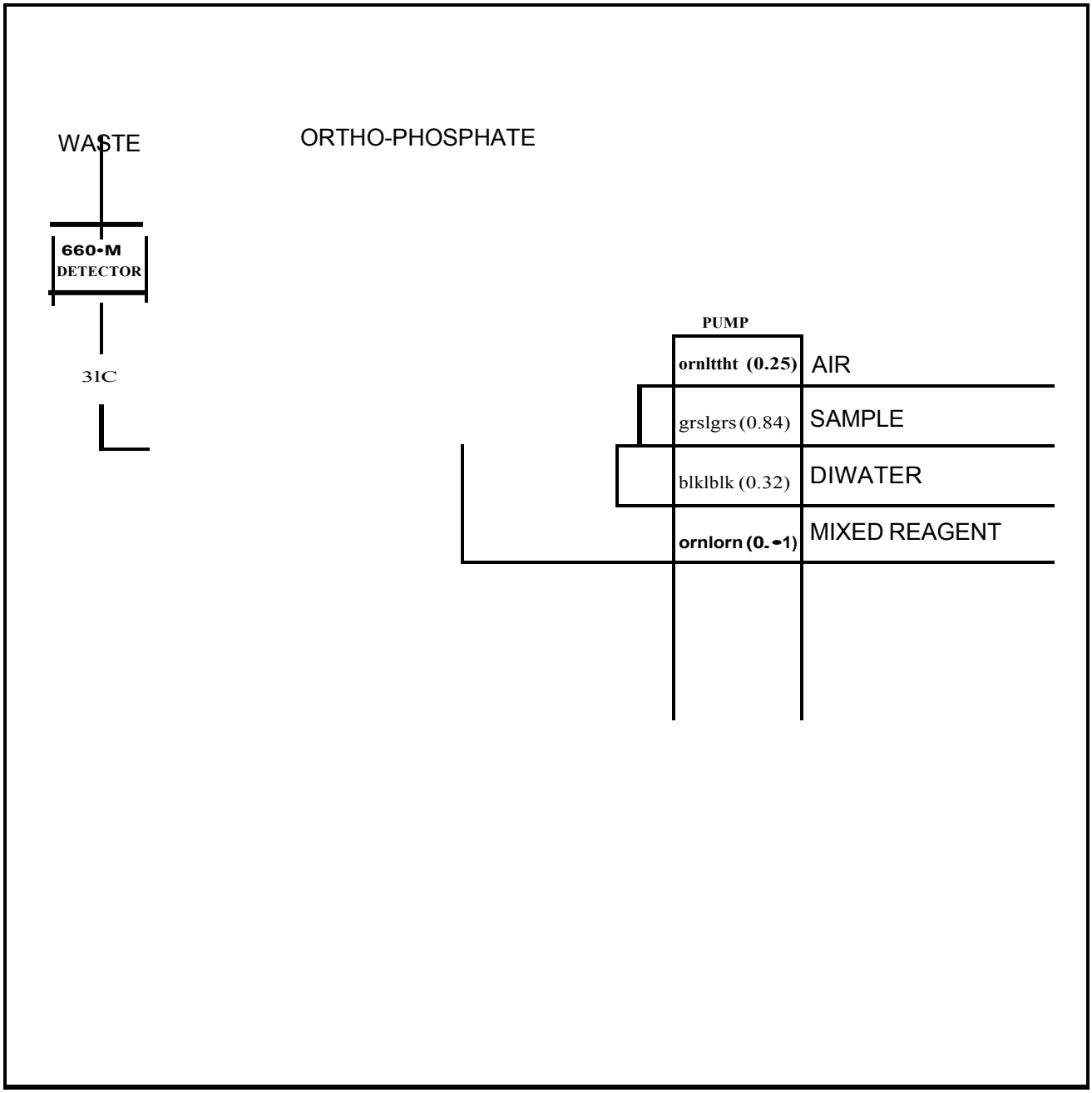
WASTE
ORTHO-PHOSPHATE
660-M
DETECTOR
31C
PUMP
ornlttht (0.25)
AIR
grslgrs (0.84)
SAMPLE
blklblk (0.32)
DIWATER
ornlorn (0.-1)
MIXED REAGENT

Automated Wet Chemistry
for Silicate
using Perstorp by AlpKem

October 2009

Coweeta Hydrologic Lab
3160 Coweeta Lab Road
Otto, N.C. 28763

Sponsoring Agency: James M.

Vose, Project Leader U.S.

Forest Service
University of Georgia

Laboratory Manager:

James M. Deal

Chemist:

Cindi Brown

Laboratory Technician:

Carol Harper
Neal Muldoon
Sheila Gregory

Instrument retired October 25, 2011

INDEX

AlpKem

Section Number	Subject
01	Scope and Application
02	Summary of Method
03	Definitions
04	Interferences
05	Safety
06	Apparatus and Equipment
07	Reagents and Consumable Materials
08	Calibration and Standardization
09	Quality Control
10	Procedure and Calculations
11	Precision and Bias
12	References

TABLES

1. Method Detection Limits.
2. Suggested Calibration Standards for Samples at Coweeta.
3. Single-Operator Precision and Bias for Silicate determined from Quality Control Samples. (high range)
4. Single-Operator Precision and Bias for Silicate determined from Quality Control Samples. (low range)
5. Example of Sample ID Table.
6. Example of Sampler/Channel Setup Table.
7. Example of Standards Table

FIGURES

1. System diagram for Perstorp 3500.
2. Manifold setup for Orthophosphate.

1. SCOPEANDAPPLICATION

1.1 This method is applicable to the determination of Silica in Stream, Precipitation, Thrufall, and Lysimeter samples.

1.2 Method detection limits are summarized in Table 1.

1.3 This method is not recommended for samples that have been frozen.

2. SUMMARYOFMETHOD

2.1 Samples are drawn from the automated sampler into a stream of reagents. Air bubbles are introduced to keep each sample discreet. The Silicate then reacts with Ammonium Molybdate $(NH_4)_6Mo_7O_{24}\cdot 4H_2O$ in acid media to form β-molybdosilicic acid. The complex is reduced by Ascorbic Acid $C_6H_8O_6$ to form Molybdenum Blue. The reaction is measured at 660nm when the solution goes to the detector. The detector is a spectrometer that utilizes a flow cell to measure changes in transmitted light intensity. Beer's law correlates transmitted light intensity to the concentration of ions in the sample.

log (1/T) = abc
where: T = transmittance
a = absorptivity
b = length of light path
c = concentration of ion (mg/L)

Calibration curves are constructed from a series of known standard concentrations. The concentration of the samples are calculated based on the calibration curve.

3. DEFINITIONS

3.1 Absorbance -- The measurement of the absorption of a particular wavelength of light as it passes through a liquid.

3.2 Colorimetry -- the measurement of light transmitted by a colored complex as a function of concentration.

3.3 Monochromator -- a detector which measures absorbance of light at specific wavelengths using a diffraction grating to select a specific wavelengh of light.

3.4 Peristaltic Pump -- a pumping system which moves liquids by compressing flexible tubing between a solid surface (platen) and a roller.

3.5 Segmented Flow Analysis (SFA) -- a technique where the samples are separated by bubbles of a gas. The bubbles also help mix the reagents as they move through the manifold coils.

3.6 Transmittance -- The ratio of the radiant power transmitted by a sample to the radiant power incident on the sample

4. INTERFERENCES

4.1 Highly colored samples that absorb in the wavelength range of 640 - 660nm can cause false positive readings. Samples at Coweeta are usually clear so this is no problem.

4.2 Samples high in turbidity must be filtered prior to analysis.

4.3 Phosphates interfere but are suppressed by Oxalic Acid.

4.4 Do not freeze samples, silica will precipitate out of solution and cause false negative readings.

5. SAFETY

5.1 Wear lab coat, gloves, and eye protection when using Sulfuric Acid, Oxalic Acid Acetone, and Ammonium Molydate. Always work under a hood, vapors can be harmful.

5.4 Wear protective clothing when working around the manifold, tubes could become clogged and pressure may increase enough to cause a tube to pop loose.

5.5 Read the lab safety plan and ask the lab safety officer if you have any questions.

6. APPARATUSANDEQUIPMENT

6.1 Perstorp Enviroflow 3500

6.1.1 Autosampler:
Perstorp model 501 is a 300 position random access sampler. It can be operated in manual or remote mode.

6.1.2 Dilutor:
Perstorp model 511 is an autodilutor interfaced to a computer. After a sample run is complete the computer recognizes peaks that have run above the highest calibration standard. The computer instructs the autosampler and the dilutor to rerun the off scale samples making a 10 X dilution.

6.1.3 Peristaltic Pump:
Perstorp model 502 is a multispeed peristaltic pump with individual platens for 24 tubing channels. Pump speed and tubing inside diameters determine the flow rates for the sample and reagents.

6.1.4 Mixing Manifolds:
Perstorp Supercartridge Jr. is a preconfigured mixing manifold for testing of Nitrate. The cartridge consist of polymeric tubing, fitting, reagent tees, coils and connectors.

6.1.5 Cartridge Heater:
Perstorp model 503 cartridge heater is a electronic digitally operated temperature controller. It incorporates four heater cones to provide heat to Supercartridges when needed.

6.1.6 Detector:
Perstorp model 510 is a variable wavelength, flow through absorbance detector.

Wavelength is selected by a user adjustable concave holographic grating. The detector can operate from 360 nm to 800 nm with a tungsten halogen lamp. Output from the detector is sent to the computer and digitized.

6.1.7 Computer Interface:
Analog signals from the detectors are processed by an ER interface.

6.1.8 Computer Software:
Perstorp Winflow software package allows user control of the autosampler, diluter, data acquisition, calculation of results and analog signal display. Analysis parameters are entered via on screen tables and a series of prompting menus. Reports are generated to printer or disk.

6.1.9 Computer:
System requires at least a Pentium 90hz microprocessor, 16 meg of ram, floppy disk drive, cdrom drive, 1gig hard drive, color monitor, printer, mouse, serial port, and parallel port.

7. REAGENTSANDCONSUMABLEMATERIALS

Prepare all reagents in Silicate free DI water. Filter the all reagents prior to use.

7.1 Sulfuric Acid, .05M (250mL)
Add .7mL of concentrated Sulfuric Acid H_2SO_4 to 200mL of DI water. Mix well and dilute to final volume of 250mL.

7.2 Ammonium Molybdate Reagent (250mL)
Place stir bar in 250mL flask with 200mL of .05M Sulfuric Acid. While stirring, add 2.5g of Ammonium Molybdate $(NH_4)_6Mo_7O_{24}\cdot 4H_2O$ and dissolve. Dilute to 250mL with .05M Sulfuric Acid and add .25mL of Dowfax 2A1 wetting agent. Store reagent in dark polyethylene bottle at 4° C. Reagent is not stable for more than two days. If reagent turns a faint blue, then remake. Water may be contaminated with SiO_2.

7.3 Oxalic Acid (1L)
Dissolve 50g of Oxalic Acid $C_6H_8O_6$ in 1L of DI water.

7.4 Acorbic Acid (250mL)
Dissolve 4.4g of Ascorbic Acid $C_6H_8O_6$ in 200mL DI water with 12.5mL of Acetone. Dilute to 250mL with DI water. Store in plastic bottle at 4^oC for no more than one week.

8. CALIBRATIONANDSTANDARDIZATION

8.1 Anion calibrants, 1000mg/L are purchased from Ricca yearly.

8.2 Working Standards:
For precipitation samples: .010 mg/L, .050 mg/L, .100 mg/L, .200 mg/L
For stream samples: 2.0 mg/L, 6.0 mg/L, 10.0 mg/L, 14.0 mg/L

9. QUALITYCONTROL

9.1 Deionized water blanks are poured up weekly with the DWS samples. These serve as a check on the DI water system, and the bottle washing. A random sample of washed bottles are

checked with a conductivity meter and any reading above 1.0 μmho indicates that set of bottles needs to be rinsed again. DI water blanks are also poured up for the Al collection. Blanks are taken into the field and treated as samples. Another check of the DI system is weekly measurements of the DI conductivity, when the NADP sample is measured. Any reading above 1.0 μmho indicates a dirty cartridge and the cation exchange cartridges are changed.

9.2 Stock solutions are made up or purchased yearly. Two aliquots are set aside in order to check the stock concentration if necessary.

9.3 QC concentrates from NSI are sent to the lab quarterly. They are analyzed for SO_4, Cl, NO_3, NH_4, PO_4, and TKN. A value within the 95% C.I. is considered acceptable. Samples are run in triplicate. X bar charts will be used for these results. See Standard Methods, 1989. Perkin-Elmer cation concentrate (Alternate Metals II) is used to check the Atomic Absorption Spectrophotometer. It is purchased yearly.

9.4 A standard curve is determined before every analysis with the Perstorp 3500. R squared must equal 0.98 or greater before samples are analyzed.

9.5 Daily QC checks are done with solutions made from the NSI concentrates. Acceptable ranges for each ion are based on 95% confidence limits.

9.6 Check limits of detection annually for all instruments.

9.7 Check calibration of balances twice a year.

10. PROCEDUREANDCALCULATIONS

10.1 Startup:

1. Make up reagents and standards.
2. Configure pump with proper tubes and connect to Silicate cartridge.
3 Turn power on and apply tension to pump platens.
4. Connect all lines to H_2O and surfactant and observe stream.
5. Connect reagent lines and observe stream.

10.2 Computer and Sampler startup:

1. Turn power on and run Winflow program.
2. Select and click the Sample Table button. Edit an existing table or create a new one. Table should start with highest calibration standard (SYNC) sample followed by the lowest sample for carry over correction (CO) then a read baseline (RB). Calibration standards are next with duplicates from highest to lowest. Include QC standard after calibration standards and RB. Insert calibration verification (mid-range standard) after each 20 samples. For each sample cup indicate: location, sample ID, type, dilution, and weight. Rename, save and print the sample table.

II. Click the Method Editor button and load an existing Methods file or create a new file. Verify all settings are correct. Refer to a previous method or the help files.

III. Select the Data Collect button and verify or select Method and Sample Table in Run Setup. Start pump with reagents tubes in surfactant water.

5. Enter an Operator ID and verify or enter a Filename for the run.
6. Click on the Play button and monitor the baseline. When the baseline is stable on startup solution (water) then switch to reagents. Allow a few minutes for reagents to equilibrate and monitor for a steady baseline.

10.3 Sample run:

1. When a stable baseline has been achieved use the Sample Table print out to start

loading the sample trays.

2. Click the Fast Forward Start button to start data collection and sampler.
3. Monitor the run until the SYNC peak has eluted and successfully marked the top of the peak at its steady state. Allow the run to continue. If run stops automatically then data file will be saved. If the run is stopped manually by clicking the Stop button then be sure to save the results once the completed run is displayed.
4. Review the results. Calibration curve should yield an r^2 value greater than .98.
5. Reports are produced by opening the File window and selecting the proper option. Reports may be edited, printed, and exported as needed.

10.4 Shutdown:

1. Connect all reagent lines to deionized water.
2. Pump deionized water through the system for 15-20 minutes.
3. Turn off the 509 power and unlatch all pump platens. Caution: Pump tubes may be seriously damaged if the platens remain latched with the pump power off.
4. If the cartridge is to be stored away from the system or if it will not be used for a week or more, remove the reagent lines from the deionized water and pump the cartridge completely dry.
5. Turn off the gas supply if not being used.

10.5 Troubleshooting:

1. Don't overlook the obvious. Look for the simplest and most obvious cause for a particular problem or solution. Check for correct power to all modules and the power switches are on. Check for correct connection of all control and signal lines. Check tubing connections and flow through system.
2. Rule out operator induced errors. Consult the system manual and manuals for each application for proper operating procedures and protocols. Review test methodologies and flow diagrams to verify operation parameters.
3. Isolate and define the problem. Categorize the problem or symptom as one of the following:

Chemistry	Hydraulic	Electrical/Mechanical
Reagent	Pump tubing	Circuit components
Standards	Bubble size	Optics/Lamps
pH	Surfactant	Photometer/Detector
Temperature	Pump	Cabling

4. Eliminate one variable at a time. Using good experimentation techniques change only one component or variable at a time and note the changes and results. In this manner, the problem may be cured or the solution more clearly defined.
5. Document the solution. Keep a log of your troubleshooting activity including problem, symptoms, causes, and solution. This information may be helpful for future troubleshooting sessions or for other users.
6. Refer to the operation manual for further troubleshooting guides.

11. PRECISIONANDBIAS

11.1 Single operator precision and bias were obtained from the analysis of quality control check samples. QC samples were obtained from NSI Solutions and were diluted

according to manufactures directions. Table 3 summarizes the data.

12. REFERENCES

12.1 PerstorpEnviroflow3500OperationManuals, Perstorp Analytical Corporation, 1992.

12.2 StandardMethodsfortheExaminationofWaterandWastewater, Method 425 E, "Determination of Silicate by Automated Wet Chemistry", 16th edition, 1985.

Table 1. Method Detection Limits and Concentration Ranges for Silica

Analyte	Method Detection Limit mg/L	Concentration Range mg/L
Silicate	.010	0.01 - 14.00

Method Detection Limit: Sample Standard Deviation X Student's t value for one-tailed test at 99% confidence level with degrees of freedom = 9

Table 2. Suggested Calibration Standards for Silicate Sample at Coweeta

Analyte	Calibration Standards mg/L
Silicate -- high range	2.0, 6.0, 10.0, 14.0
Silicate -- low range	0.010, 0.05, 0.10, 0.50, 1.00

Table 3. Single Operator Precision and Bias for Silicate determined from Standards

Analyte	True Value mg/L	Number of Samples	Mean Measured mg/L	Mean Bias, mg/L	Standard Deviation, mg/L	Relative Standard Deviation, %
Silicate	.100	15	.103	.003	.003	2.609

Relative Standard Deviation: 100 X (Sample Standard Deviation/Mean Value)
Mean Bias: Sum of bias for each sample/number of replicates

Figure 1

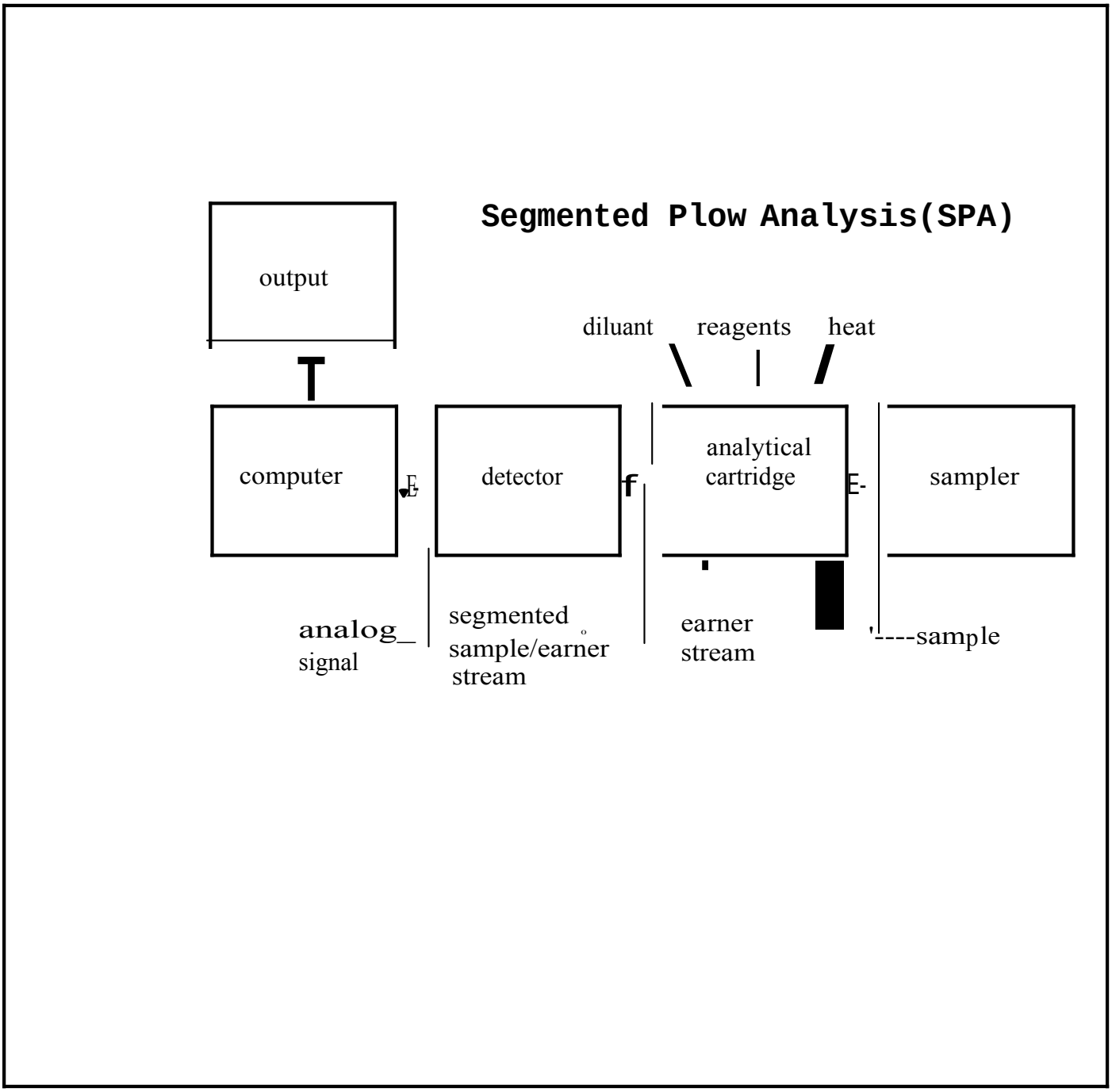
Segmented Plow Analysis(SPA)
output
diluant
reagents
heat
computer
detector
analytical cartridge
sampler
analog_ signal
segmented sample/earner stream
earner stream
----sample

Figure 2.

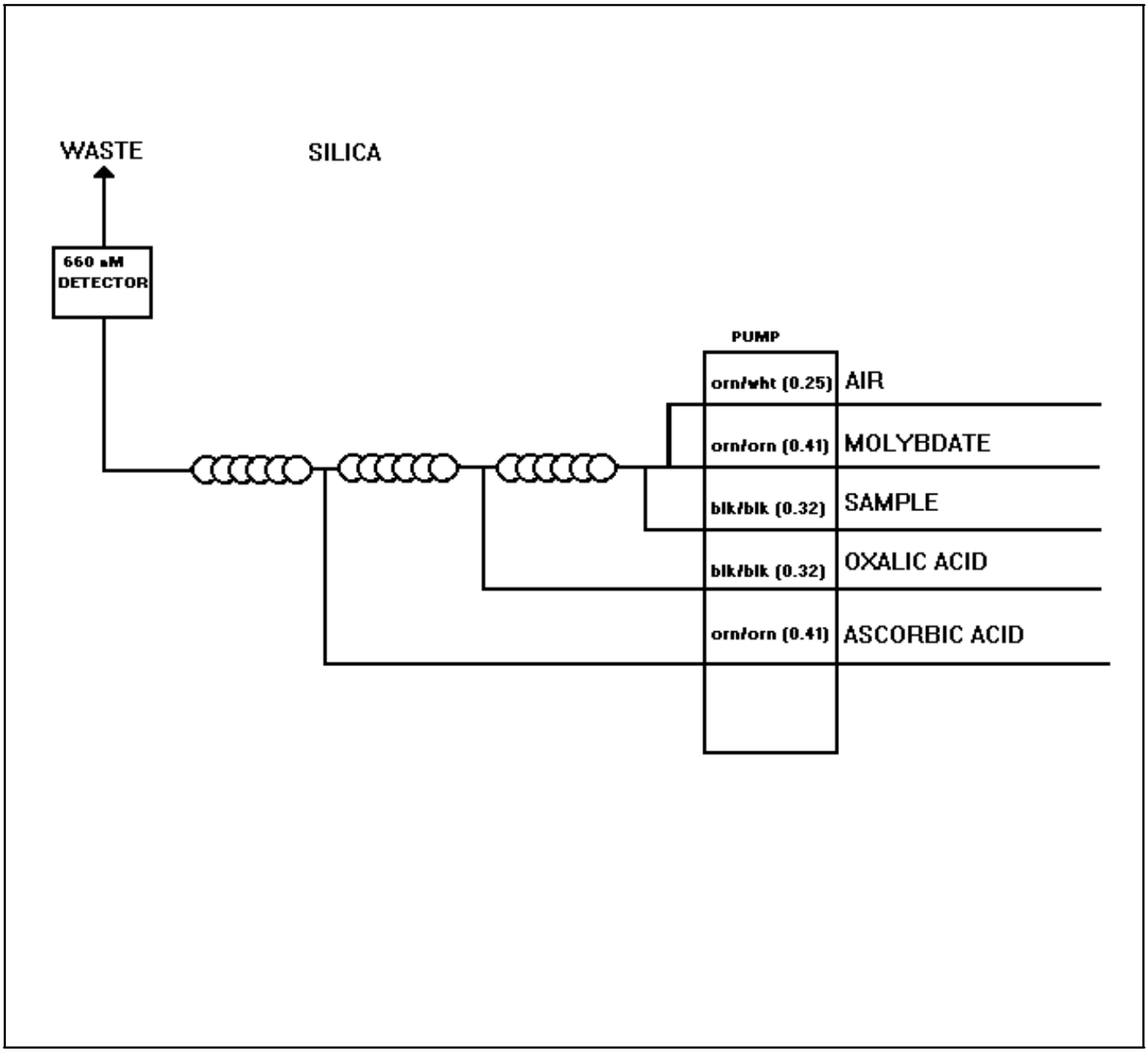
WASTE
SILICA
660 nM DETECTOR
PUMP
orn/wht (0.25)
AIR
orn/orn (0.41)
MOLYBDATE
blk/blk (0.32)
SAMPLE
blk/blk (0.32)
OXALIC ACID
orn/orn (0.41)
ASCORBIC ACID

Flow Injection Analysis for Total Phosphorous and ortho-Phosphate

October 2009

Coweeta Hydrologic Lab
3160 Coweeta Lab Road
Otto, N.C. 28763

Sponsoring Agency: James M.

Vose, Project Leader U.S.

Forest Service
University of Georgia

Laboratory Manager:

Cindi Brown

Chemist:

Cindi Brown

Laboratory Technician:

Carol Harper
Neal Muldoon
Sheila Gregory

Instrument retired 2011

INDEX

Section Number	Subject
01	Scope and Application
02	Summary of Method
03	Definitions
04	Interferences
05	Safety
06	Apparatus and Equipment
07	Reagents and Consumable Materials
08	Calibration and Standardization
09	Quality Control
10	Software
11	Procedure
12	Troubleshooting Guide
13	Precision and Bias
14	References

TABLES

1. Method Detection Limits.

FIGURES

1. Manifold setup for Total Phosphorous.

1. SCOPEANDAPPLICATION

1.1 This method is applicable to the determination of Total Phosphorous and Orthophosphate in Stream, Precipitation, Thrufall, Lysimeter, and extracted soil samples.

1.2 Method detection limits are summarized in Table 1.

2. SUMMARYOFMETHOD

2.1 The digestion of phosphorous is converted to phosphate using persulfate with in line UV digestion. The ortho-phophate reacts with ammonium molybdate and antimony potassium tartrate to convert to phosphomolybdate. Reduction occurs using ascorbic acid and a blue complex is formed which absorbs light at 880nm. The concentration of the analyte is proportional to the intensity of color produced. Ortho-Phosphate is quantified in the same manner skipping the digestion step. Calibration curves are constructed from a series of known standard concentrations. The concentration of the sample is calculated based on the calibration curve.

3. DEFINITIONS

1.1.1. Flow Injection Analysis – based on the injection of a liquid sample into a moving, non-segmented continuous carrier stream of a suitable liquid. The injected sample forms a zone, which is then transported toward a detector that continuously changes due to the passage of the sample material through the flow cell

1.1.2. Colorimetry – a technique by which color is measured in a solution that contains an analyte to be determined. Typically, a calibration standard is combined with specific reagents that react with the analyte and form a chemical complex with a distinct color that can be measured. The intensity of the color is proportional to the concentration of the analyte in the calibration standard.

1.1.3. Flow Cell – light filter used to determine the intensity of the color created after the chemical mixes with the reagents

1.2. Fiagram – graphic peaks generated during flow injection analysis

4. INTERFERENCES

1.2.1. Silicate is not a significant interference when using this method. 1000 mg/L SiO2 gives a response of approximately 6 ug P/L.
1.2.2. Glassware contamination is a problem in low level phosphorous determinations. Glassware should be washed with 1:1 HCl and rinsed with deionized water. Commercial detergents should rarely be needed but, if they are used, use special phosphate-free preparations for lab glassware
1.3. Noisy baselines can interfere with peak sensitivity
1.4. Reagents not being properly degassed leads to air spikes on fiagram
1.5. Proper timing of peak start and peak width is necessary to properly measure peaks

5. SAFETY

1.1.1 The toxicity or carcinogenicity of each reagent used in this method has not been fully established. Each chemical should be regarded as a potential health hazard and exposure should be as low as reasonably achievable.

1.1.2 The following chemicals have the potential to be highly toxic or hazardous, for detailed explanation consult the MSDS
Sulfuric Acid
Sodium Dodecyl Sulfate

6. APPARATUSANDEQUIPMENT

1.1 Random Access Sampler (RAS):

1. Samples are loaded into 12ml reusable plastic vials
2. Sampler operated in accordance with labels in software tray table
3. Sampler time in sample and time in wash bath listed in method
4. Sampler can hold 60 samples

Maintenance / Troubleshooting
-If it doesn't stop then check for felt on red sample cups
-If it's skipping cups either the bottom piece is dirty, it's not put in completely, the sensor near sample arm is dirty Ensure plate that guides trays isn't loose

1.2 Pump:

1. Pumps left to right, there are arrows on plastic tube holders to guide placement Place the tensioner on the tube holder one click to the left to prevent tubes wearing out Cartridge holder can break
2. Always unclamp cartridges when not running
    i. Pump speed is always 35 To test pump speed it takes approximately 50 seconds for 10 pump revolutions

Maintenance/Troubleshooting
-Replace duraprene (pvc) pump tubes after three full days of running the instrument
-Santoprene tubes are replaced after running for a month the pump
-Always use diagram to ensure proper tubing size
-Waste line can clog with extended use

1.3 Heating Module:

1. Consists of a temperature controller and a heating block
2. The temperature controller allows the operator to manually adjust heat settings
    i. The heating block consists of a heat rod, heat sensor, heat unit, and it is wrapped in tubing

Maintenance/Troubleshooting
-Front panel pops off for access
-Should only need to worry about the tubes, not the block
-Be careful when replacing, ensure the heat sticks are reinstalled
-Controllers can be removed and switched

1.4 Flow Cell:

1. The flow cell measures the intensity of the color created and determines the concentration of the analyte
2. The type of light filter is listed in each method

Maintenance/Troubleshooting
7-Make sure there's a flared seal and 3 O-rings
-When leaking, will come out through window
-Check once a month
-Leaks are almost always dealing with the seal
-Put in writing down
-Flow goes in bottom waste comes out top
-Filter narrows down light specific to chemistry, check methods for proper filter
-Filters will gradually degrade, clean with a Qtip and alchohol
-If not using filter for a long period put in desiccator

7. REAGENTSANDCONSUMABLES

1. Reagents
   i. **Total Phosphorous method 10-115-01-30 E** (each volumetric has 500 mL DI to start)
      1. *Stock Molybdate*: 40g ammonium molybdate tetrahydrate fill to 1L in volumetric using DI water, mix with magnetic stirrer
      2. *Stock Antimony Potassium Tartrate*: 3.22g antimony potassium tartrate fill to 1L in volumetric using DI water, mix with stirrer
      3. *Molybdate Color Reagent*: 25mL sulfuric acid, 213 mL ammonium molbydate solution, 72 mL antimony potassium tartrate solution fill to 1L in volumetric using DI water, mix with stirrer, degas
      4. *Ascorbic Acid Reducing Solution*: 70g granular ascorbic acid, fill to 1L in volumetric using DI water, mix with stirrer, degas, then add 1.0g sodium dodecyl sulfate
      5. *Sulfuric Acid Carrier Solution*: 30mL sulfuric acid, 9g potassium chloride fill to 1L in volumetric using DI water, mix with stirrer, degas
      6. *Digestion Reagent 1*: 106.5 mL sulfuric acid, fill to 1L in volumetric using DI water, mix
      7. *Digestion Reagent 2*: 26g potassium persulfate, fill to 1L in volumetric using DI water, mix with stirrer, degas
   ii. **Orthophosphate Water method 10-115-01-1-A** (each volumetric has 500 mL DI to start)
      1. Stock Molybdate and Antimony Potassium Tartrate same as total phosphorous
      2. *Molybdate Color Reagent*: 35mL sulfuric acid, 213 mL ammonium molbydate solution, 72 mL antimony potassium tartrate solution fill to 1L in volumetric using DI water, mix with stirrer, degas
      3. *Ascorbic Acid Reducing Solution*: 60g granular ascorbic acid, fill to 1L in volumetric using DI water, mix with stirrer, degas then add 1.0g sodium dodecyl sulfate
      4. *Sulfuric Acid Carrier Solution*: 30mL sulfuric acid, 9g potassium chloride fill to 1L in volumetric using DI water, mix with stirrer, degas
      5. *Sodium Hydroxide* – EDTA Rinse: 65g sodium hydroxide, 6g tetrasodium ethylenediamine tetraacetic acid, fill to 1L in volumetric using DI water, mix with stirrer
   iii. **Orthophosphate Soil Extraction method 12-115-01-1-N** (each volumetric has 500 mL DI to start)
      1. *Bray No. 1 Extraction Solution*: 12.7 mL of 2 M hydrochloric acid and 1.1 g ammonium fluoride, mix with magnetic stirrer

2. *Mechlich No. 3 Extraction Solution*: to a 2L volumetric flask containing 800mL DI water, 40g ammonium nitrate, 22.98 mL acetic acid, 1.68 mL HNO3, 1.12 ammonium fluoride, .58g EDTA
3. Stock Molybdate and Antimony Potassium Tartrate same as total phosphorous
4. *Molybdate Color Reagent*: 21mL sulfuric acid, 213 mL ammonium molbydate solution, 72 mL antimony potassium tartrate solution fill to 1L in volumetric using DI water, mix with stirrer, degas
5. *Ascorbic Acid Reducing Solution*: 60g granular ascorbic acid, fill to 1L in volumetric using DI water, mix with stirrer, degas then add 2.0g sodium dodecyl sulfate
6. *Sodium Hydroxide* – EDTA Rinse: 65g sodium hydroxide, 6g tetrasodium ethylenediamine tetraacetic acid, fill to 1L in volumetric using DI water, mix with stirrer

2. Sample Vials – 12ml sample vials: RAS sampler holds 60 samples and 16 standards

8. CALIBRATIONANDSTANDARDIZATION
   1. Stock solutions are 1000ppm Ricca single analyte calibrants
   2. Working standards in a 1000 mL volumetric
      i. Total Phosphorous: .01, .1, .5
      ii. Orthophosphate in water: .01, .8, 1.5
      iii. Orthophosphate soil extractions: .4, 5, 12, 20

9. QUALITYCONTROL
   1. Stock solutions are made up or purchased yearly. Two aliquots are set aside in order to check the stock concentration if necessary.
   2. QC concentrates from NSI are sent to the lab quarterly. They are analyzed for TP and PO4. A value within the 95% C.I. is considered acceptable. Samples are run in triplicate. X bar charts will be used for these results. See Standard Methods, 1989.
   3. A standard curve is determined before every analysis with the Ion Chromatograph. R squared must equal 0.995 or greater before samples are analyzed.
   4. Daily QC checks are done with solutions made from the NSI concentrates. Acceptable ranges for each ion are based on 95% confidence limits.
   5. Check limits of detection annually for all instruments.
   6. Check calibration of balances twice a year.

10. SOFTWARE
    1. **Common files**
       i. Methods - save and reuse
       ii. Tray file – list of samples, can be made daily
       iii. Data file – all information for a give sample run
       iv. Runtime report – raw data
       v. DQM file: QC's, allows you to enter data parameters, can set up to stop and inform if QC's are out of range
       vi. When opening old data file make sure to open then load method and analyze
       vii. Review analyte calibration screen allows you to see what cal changes will do
       viii. To actually change go to analyte screen placing cal stds in two levels allows you to delete one if it's bad
    2. Method
       i. Graphical events – change peak base width / threshold to fix timing
       ii. Description – overview of method (basic)

iii. Analyte Table – where you enter standards, cal handling, cal fit-type, force through zero, weighting, chemistry, inject to peak start, peak base width, width tolerance, threshold, method name
iv. Valve timing: turn on 1 or both valves, load time, period, inject period, method cycle period, sample reaches first valve time
v. Sampler timing – min. probe in wash, probe in sample period
vi. Pump timing – standby pump settings
vii. Display options – size of peak graph
viii. Review cal curves – see cal results, view possible changes without being able to apply
ix. Cal clear
x. Cal clear level
xi. Cal failure criteria – give warning or shut down sampling if cal is out of criteria
xii. Copy – copy method
xiii. Tray Level column tells what sample type (ex. 1-16 = cal std 0 = unknown)

11. PROCEDURE

1. MachineStartup

i. Turn on instrument using power strip behind the battery backup
ii. Make sure there is DI in brown bottle to fill wash bath
iii. Check waste container and make sure it can hold the waste created during the sample run
iv. Place reagent lines in DI water, clamp down lines onto pump
v. Press manual run/stop button on pump to begin operation, speed should be 35
vi. Let run for one minute then individually lift up each line out of the DI and check air bubble for consistent flow
vii. For TP method set temperature of digestion block heater to 120 C there must always be liquid in pump tubes when the temperature is above 80 C, valve block heater is 50 (valve 1)
viii. For o-PO4 method turn power off to digestion block, valve block heater is 37 (valve 2)
ix. Check for leaks at all connection points on the machine
x. When everything checks out put tubes into their proper reagent bottle

2. SoftwareStartup

i. Turn on computer
ii. Click on start menu
iii. Click ok
iv. Login
v. Click on lachat icon, listen for valves turning and ensure sample probe enters the wash bath
vi. Click on file
vii. Open method, open up the method you are using that day

3. CalibrationandSampleRun

i. Make reagents according to method, make calibrants and qc's using method and guidelines in wetlab - qc folder
ii. In software pull up *analyte table* and verify settings are correct using method sheet, always put each of the three samples for each calibrant in its own column, by doing this you make it possible to delete one if necessary to correct the calibration curve
iii. In software pull up *tray table* and enter samples, for calibration run make sure to run each qc 3 times, only enter data into columns you want sampled, any writing in a column will cause the machine to sample that column

iv. Always run calibration separate from your samples, it is impossible to make changes to your calibration curve and apply it to samples if they are not separate

v. Save files as the date and go alphabetically (a, b, c, etc.) to distinguish when you run more than one tray per day

4. <u>Shutdown</u>

i. Remove lines from reagents and place in DI water

ii. Turn In-Line sample prep module heater temperature to 70 or below

iii. Run DI until the in-line sample prep module heater temperature is below 79

iv. If running the next day you can leave DI in the lines, otherwise remove the lines from DI and let DI drain completely, make sure to take tube from wash bath bottle and turn sampler off and on to get the sampler out of the wash bath

v. Stop pump and unclamp immediately, if sample lines are left clamped on the pump more than a few minutes without the pump running they will need to be replaced

vi. If the waste tub is near full empty into hazardous waste container in the building behind the lab

12. <u>TROUBLESHOOTING</u>

1. Don't overlook the obvious. Look for the simplest and most obvious cause for a particular problem or solution. Check for correct power to all modules and the power switches are on. Check tubing connections and flow through system.
2. Rule out operator induced errors. Consult the system manual and manuals for each application for proper operating procedures and protocols. Review test methodologies and flow diagrams to verify operation parameters.
3. Isolate and define the problem. Categorize the problem or symptom as one of the following:

Chemistry	Hydraulic	Electrical/Mechanical
Reagent	Pump tubing	Circuit components
Standards	Flow blockage	Optics/Lamps
pH	Leak	Flow Cell
Temperature	Pump	Cabling

4. Eliminate one variable at a time. Using good experimentation techniques, change only one component or variable at a time and note the changes and results. In this manner, the problem may be cured or the solution more clearly defined.
5. Document the solution. Keep a log of your troubleshooting activity including problem, symptoms, causes, and solution. This information may be helpful for future troubleshooting sessions or for other users.
6. See manual for further trouble shooting solutions

13. <u>PRECISIONANDBIAS</u>

11.1 Single operator precision and bias were obtained from the analysis of quality control check samples. QC samples were obtained from NSI Solutions and were diluted according to manufactures directions.

14. REFERENCES

<u>UserManualQuikChemFIA+8000Series</u>, Lachat Instruments, 1999.

<u>MethodsforChemicalAnalysisofWaterandWaste,</u> Method 350.1, EPA, 1983

Table 1 – Method Detection Limits

.050ppm	Total P	O-PO4
QC	0.050	0.044
QC	0.050	0.044
QC	0.050	0.045
QC	0.050	0.043
QC	0.050	0.044
QC	0.050	0.042
QC	0.050	0.047
QC	0.050	0.044
QC	0.050	0.048
QC	0.050	0.043
avg		
std	0.050	0.044
mdl	0.000	0.002
	0.001	0.005

Figure 1. Manifold Setup for Phosphorous

12.3 TOTAL PHOSPHORUS MANIFOLD DIAGRAM

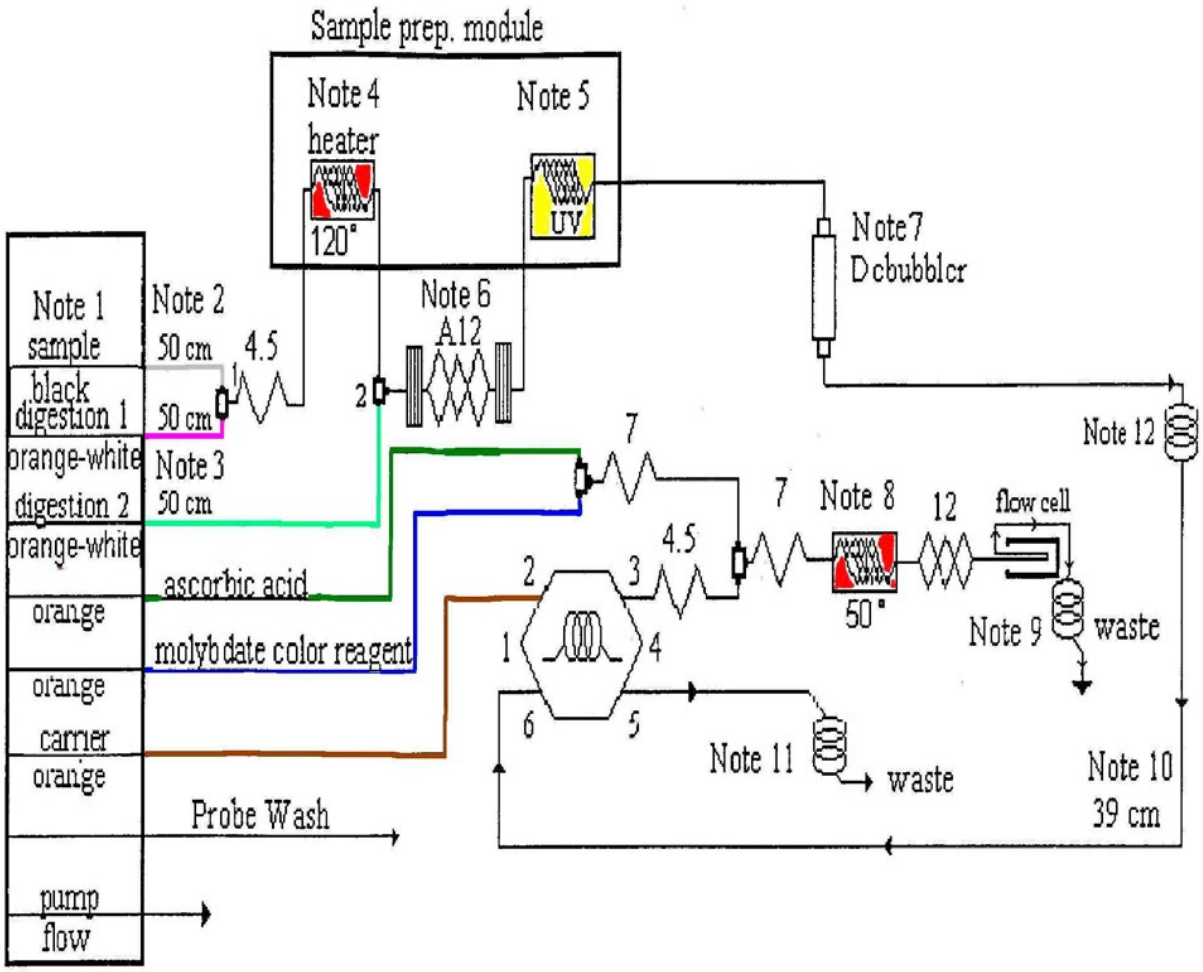

Inductively Coupled Plasma Spectroscopy
Determination of
Potassium, Sodium, Calcium, Magnesium,
Aluminum, Sulfur and Phosphorous

Jobin Yvon Ultima II

October 2009

Coweeta Hydrologic Lab
3160 Coweeta Lab Road
Otto, N.C. 28763

Sponsoring Agency: James M.

Vose, Project Leader U.S.

Forest Service
University of Georgia

Laboratory Manager:

Cindi Brown

Chemist:

Cindi Brown

Laboratory Technician:

Carol Harper
Neal Muldoon
Sheila Gregory

The instrument was retired November 2012

INDEX

Number	Subject
01	Scope and Application
02	Summary of Method
03	Interference's
04	Range
05	Apparatus and Equipment
06	Safety
07	Requirements
08	Reagents
09	Standards
10	Procedure
11	Quality Control
12	Washing Procedure for Glassware and Centrifuge Tubes
13	References

TABLES

1. Method Detection Limits

FIGURES

1. Sample ID Sheet
2. Sample ID File
3. Program Element File
4. Instrument Page
5. AutoSampler Page

Inductively Coupled Plasma Spectroscopy

1. SCOPE AND APPLICATION

1.1 This method is applicable for the determination of K, Na, Mg, Ca, Al and P in sample matrices of water, 2% nitric acid, 0.5M HCl, and soil extract (See cation soil procedure).

2. SUMMARY OF METHOD

Inductively Coupled Plasma (ICP) Spectroscopy utilizes a high energy plasma not only to dissociate the sample but excite and ionize the atoms for atomic and ionic emission. The light emitted is focused onto a diffraction grating via a slit and a mirror. As the grating rotates a different wavelength is focused onto a second mirror and the exit slit. The light is then directed to a photomultiplier tube where the signal is amplified to a measurable amount. A calibration curve is developed for each element plotting intensity versus concentration.

3. INTERFERENCES

ICP was developed to eliminate interferences encountered using Atomic Absorption. However there are usually more than one wavelength associated with each element and some wavelengths from different elements can overlap and interfere. Therefore a profile must be developed for each line and background correction applied if necessary.

4. RANGE

K, Na, Ca, Mg, Al and P all have a working range up to 1000ppm.

5. APPARATUS AND EQUIPMENT

5.1 Jobin Yvon Ultima II Spectrophotometer (instrument was upgraded to an Ultima)

5.2 Jobin Yvon AS 421 autosampler

5.3 PolyScience water recirculator

5.4 LabCraft nitrogen generator

6. SAFETY

6.1 Never look directly at the plasma.

6.2 The exhaust must be on.

6.3 The quartz tubes, alumina injector, spray chamber and centering ring are soaked in aqua regia once a month. This must be done under the hood.

7. REQUIREMENTS

7.1 Gases
Liquid Argon
N_2, produced from N_2 generator using air from air compressor

7.2 Water recirculator

8. REAGENTS

8.1 All calibrants and QC's are made in the same matrix of the samples being analyzed. Trace metal acids are used when needed.

8.2 1000ppm Yttrium for setting the nebulizer pressure is purchased from Fisher Scientific.

8.3 ICP Instrument Check 1, cat# JYICP-QC1 purchased from Horiba, used to determine stability and LOD.

8.4 Aqua regia – Using trace metal acids make up a 3 to 1 HCl HNO3 solution under the hood using caution.

9. STANDARDS AND CALIBRANTS

9.1 Calibrant – ICP custom mix #Q-5067 purchased from NSI Solutions Inc

9.2 QC calibration check -ICP custom mix #Q-5068 purchased from NSI Solutions Inc

9.3 Quarterly QC – Certified samples purchased from Environmental Resource Associates cat#ERA530

9.4 ICP Instrument Check 1, cat# JYICP-QC1 purchased from Horiba, used to determine stability and LOD

10. PROCEDURE

10.1 Turn on the instrument and N_2 generator and stabilize for 24 hours.

10.2 After instrument stabilizes, turn on water circulator and exhaust.

10.3 Spectrometer Start Up
a. Turn on computer.
b. Open up ICP 5.4.2 program.
c. In the Automatism screen, start plasma.
d. Go to rinse icon and set rinse.
e. Go to instrument icon and then communication detail. Perform zero order and then reference check.
f. Make up 1 to 100 dilution using ICP Instrument Check 1 and run stability check and LOD.
g. Create a sequence by:
1. Select sequence icon
2. Use drop down menu to select method.
3. Under location of samples tab, select tray.
4. Under sequence tab, insert peak search, auto attenuate and calibration.
5. Insert samples and QCs.

6. Save giving file name date of analysis, ddmmyy.

h. Run sequence by selecting arrow in upper left hand corner.

10.4 Shut down

a. Once sequence is complete, go to automatism screen and stop plasma.
b. Release tension on pump tubes.
c. Close off argon.
d. Turn off exhaust.
e. Turn off water circulator.
f. If instrument will not be used for a week or more:
   1. Turn off instrument.
   2. Turn off N_2 generator by shutting down air compressor at the breaker.

10.5 Special Considerations

The temperature of the room should be kept at 70°F.

10.6 Maintenance

1. At least once per month soak the outer and inner quartz tubes, spray chamber, centering ring, and alumina injector tube in aqua regia overnight. After soaking, discard acid, flush with DI and soak for 1 hour in DI. Rinse again in DI and allow to dry before reassembling torch. The o-rings in the torch and spray chamber should be replaced at this time.

11. QUALITY CONTROL

11.1 A three point (or more) calibration curve is generated at the start of the run.

11.2 The calibration curve is checked using a certified standard.
An accuracy of ±10% and a precision of 2% or less is maintained.

11.3 During the run the instrument recalibrates as dictated in the method.

11.4 Quarterly checks on the instrument are made using Environmental Resource Associates and NSI Solutions Inc certified QCs.

12. WASHING PROCEDURE FOR GLASSWARE AND CENTRIFUGE TUBES

12.1 a. Wash in Joy dishwashing liquid.
b. Rinse with tap water.
c. Soak overnight with 5% HNO_3.
d. Rinse five times in deionized water.

13. REFERENCES

13.1 How to Realize an Analysis in ICP with Version 5 Software, Jobin Yvon Horiba, Reference 31 088 494,February 2000.

Table 1 - PRECISION AND BIAS

2%HNO3	K(mg/l)	Na(mg/l)	Ca(mg/l)	Mg(mg/l)	P(mg/l)
1	0.21	0.21	0.23	0.26	0.29
2	0.23	0.21	0.23	0.25	0.24
3	0.22	0.22	0.23	0.25	0.25
4	0.21	0.22	0.24	0.25	0.25
5	0.22	0.21	0.24	0.25	0.26
6	0.23	0.22	0.24	0.25	0.25
7	0.23	0.22	0.23	0.24	0.24
8	0.23	0.23	0.24	0.25	0.26
9	0.22	0.21	0.23	0.25	0.23
10	0.22	0.21	0.23	0.25	0.26
avg	0.222	0.216	0.234	0.250	0.253
std	0.008	0.007	0.005	0.005	0.016
mdl	0.022	0.020	0.015	0.013	0.046

DI water	K(mg/l)	Na(mg/l)	Ca(mg/l)	Mg(mg/l)
1	0.256	0.253	0.264	0.245
2	0.240	0.253	0.267	0.245
3	0.235	0.249	0.296	0.245
4	0.243	0.247	0.262	0.245
5	0.247	0.250	0.266	0.243
6	0.236	0.246	0.301	0.245
7	0.241	0.247	0.269	0.243
8	0.253	0.245	0.258	0.244
9	0.242	0.246	0.270	0.244
10	0.241	0.250	0.261	0.246
avg	0.243	0.249	0.271	0.244
std	0.007	0.003	0.015	0.001
mdl	0.019	0.008	0.042	0.003

student t with nine degrees of freedom and a 99% confidence level = 2.821

Figure 1. – Sample ID Sheet

Samples_____ Date_____

1-1_____	_____	1-12	_____	1-23	_____	1-34	_____
1-2	_____	1-13	_____	1-24	_____	1-35	_____
1-3	_____	1-14	_____	1-25	_____	1-36	_____
1-4	_____	1-15	_____	1-26	_____	1-37	_____
1-5	_____	1-16	_____	1-27	_____	1-38	_____
1-6	_____	1-17	_____	1-28	_____	1-39	_____
1-7	_____	1-18	_____	1-29	_____	1-40	_____
1-8	_____	1-19	_____	1-30	_____	1-41	_____
1-9	_____	1-20	_____	1-31	_____	1-42	_____
1-10	_____	1-21	_____	1-32	_____	1-43	_____
1-11	_____	1-22	_____	1-33	_____	1-44	_____
2-1		2-12		2-23		2-34	
2-2	_____	2-13	_____	2-24	_____	2-35	_____
2-3	_____	2-14	_____	2-25	_____	2-36	_____
2-4	_____	2-15	_____	2-26	_____	2-37	_____
2-10	_____	2-21	_____	2-32	_____	2-43	_____
2-11	_____	2-22	_____	2-33	_____	2-44	_____
3-1	_____	3-12	_____	3-23	_____	3-34	_____
3-2	_____	3-13	_____	3-24	_____	3-35	_____
3-11	_____	322	_____	3-33	_____	3-44	_____

Chloride, Bromide, Nitrate, Orthophosphate and
Sulfate by micro-membrane suppressed
Ion chromatography
ICS2500

September 15, 2009

Coweeta Hydrologic Lab
3160 Coweeta Lab Road
Otto, N.C. 28763

Sponsoring Agency: James M.

Vose, Project Leader

U.S. Forest Service
University of Georgia

Laboratory Manager:

Cindi Brown

Chemist:

Cindi Brown

Laboratory Technician:

Carol Harper
Neal Muldoon
Sheila Cladis

INSTRUMENT RETIRED 5/23/14

INDEX

Section Number	Subject
01	Scope and Application
02	Summary of Method
03	Definitions
04	Interferences
05	Safety
06	Apparatus and Equipment
07	Reagents and Consumable Materials
08	Calibration and Standardization
09	Quality Control
10	Procedure and Calculations
11	Precision and Bias
12	References

TABLES

1. Method Detection Limits.
2. Retention Times for Chloride, Bromide, Nitrate, Orthophosphate and Sulfate.
3. Suggested Calibration Standards for Stream, Precipitation, Thrufall, and Lysimeter Samples at Coweeta.
4. Single-Operator Precision and Bias for Chloride, Bromide, Nitrate, Orthophosphate, and Sulfate determined from Quality Control Samples.

FIGURES

1. Chromatogram for a Coweeta Sample containing Chloride, Bromide, Nitrate, Orthophosphate and Sulfate.

2. Plumbing diagram for Dionex ICS2500

1. SCOPEANDAPPLICATION

1.1 This method is applicable to the determination of Chloride, Bromide, Nitrate, Orthophosphate, and Sulfate in Stream, Precipitation, Thrufall, and Lysimeter samples.

1.2 Method detection limits are summarized in Table 1.

1.3 This method is not recommended for samples that may contain high concentrations of salts or acids.

2. SUMMARYOFMETHOD

2.1 Ion Chromatography utilizes the separation capacity of an ion exchange column and the detection signal from a conductivity detector. Aliquots of samples are poured into sample vials with caps. The automatic sampler loads the sample into the sample loop. The pump controls a micro-injection valve which introduces the sample into a high pressure stream of eluent. As the sample passes through the guard column and the separator column each analyte will be retained to a certain degree by the stationary phase material in the column. After separation the analytes are pushed through the micro-membrane suppressor. The eluent ions are neutralized and the sample ions are converted to their corresponding strong acids. The conductivity detector responds to each ion as it eludes off the column. Peak area data is acquired through computer interface. Calibration curves are constructed from standards with known concentrations of each analyte. Concentrations of the unknown samples are determined based on the calibration curve.

3. DEFINITIONS

3.1 ION EXCHANGE -- a reversible process by which ions are interchanged between an insoluble material (stationary phase) and a liquid (mobile phase) with no substantial structural changes of the material.

3.2 SUPPRESSOR -- a semipermeable membrane containing cation exchange sites to suppress the eluent background conductivity.

3.3 ELUENT -- the ionic liquid mobile phase used to transport the sample through the exchange columns.

3.4 REGENERANT -- a solution that converts and maintains an active form of the suppressor.

3.5 RESOLUTION -- the ability of a column to separate constituents under specified test conditions. Peak resolution is a function of column efficiency, selectivity, and capacity. Separation of peaks can also be a function of eluent strength.

3.6 RETENTION TIME -- the interval measured from the point of sample injection to the point of maximum peak area for a given analyte.

4. INTERFERENCES

4.1 Shifting retention times can cause peaks to be misidentified or unidentified. Retention times will shorten over the life of the column due to contamination of the stationary phase. It is extremely important that the eluent be made up in the same molar concentration each time. This will minimize changes in retention times.

4.2 Peaks that elude close together may not be properly integrated if one peak is disproportional to the other peaks.

4.3 Noisy baselines can interfere with peak sensitivity. See section 10.7.

4.4 New samples should be checked for late eluding peaks by running the chromatogram for 22 minutes. Also, check for co-eluding peaks by spiking samples with pure standards.

5. SAFETY

5.1 Most of the reagents used in this method are not hazardous. Follow the American Chemical Society guidelines when using all chemicals.

5.2 The solution remaining in the eluent cartridge (KOH) is disposed of under the hood. Wear protective gloves, lab coat, and safety glasses when working with caustic.

5.3 High pressures in excess of 3000PSI are generated by the pump. Column compartment should be shielded and operator should wear safety glasses when working on high pressure lines.

6. APPARATUSANDEQUIPMENT

6.1 ION CHROMATOGRAPH:
The Dionex ICS2500 ion chromatograph is equipped with an Autosampler, Micro Injection Valve, Gradient pump, Slider Valve, Degas Unit, Conductivity Detector, Guard Column, Separator Column, Anion Self Regenerating Suppressor, and Computer software that runs under Windows operating system.

6.1.1 Autosampler:
Samples are loaded into 8ml disposable plastic vials. Autosampler can be operated in loop or concentrator mode. In loop mode the autosampler fills a sample loop which attached is to the Micro Injection valve. In the concentrator mode the autosampler will slowly fill a concentrator column which is used in place of the sample loop. Autosampler can hold 11 cassettes of 6 vials each.

6.1.2 Micro Injection Valve:
Injection valve is electric operated. It receives load and inject instructions from the gradient pump program. The use of a Micro Injection Valve and sample loop will give reproducible chromatograms.

6.1.3 Gradient Pump:
Steady pressure is the single most important parameter for good chromatography. The Dionex GPM is a programmable duel head gradient pump capable of delivering pressure up to 5000 psi. The GPM receives programming from the computer. GPM controls the timing of the injection, system pressure, and regen solution to the micro membrane suppressor. See figure 2 for a plumbing diagram.

6.1.4 Slider Valve:
The slider valve is a gas operated valve used to control the regen solution flow to the micro membrane suppressor. It can be configured in a variety of ways to suit the needs of the operator. Current configuration does not need the regen solution. See section 6.1.9.

6.1.5 Degas Unit:
The eluent solution has to be degassed before it can be pumped under high pressure. Gas in a liquid will come out of solution under high pressure which can cause the GPM to lose it's prime. The Dionex unit can degas 4 - 2 L bottles at one time. Helium is supplied to the system at 110 PSI.

6.1.6 Conductivity Detector:
The Conductivity Detector responds to each ion as they elude off the column. Communications with the computer allow for automatic range, zero offset, and conductivity cell on and off.

6.1.7 Guard Column:
Guard Columns provide protection for the more expensive Separator Column. Samples are filtered as they are injected but some very small particulates will get through and collect on the Guard Column. The Guard Column is usually a short version of the longer Separator Column. We are presently using a Dionex AG18a Guard Column.

6.1.8 Separator Column:
The 4 x 200 mm Dionex AS18a Separator Column has an ion exchange capacity of approximately 285 μeq/column. This resin is composed of a highly cross-linked (55%) 9 μm macroporous (2,000 A pore size) polyethylvinylbenzene/divinylbenzene substrate agglomerated with anion exchange latex that has been completely aminated. The latex has a polyvinylbenzyl backbone and carries the actual ion exchange sites which have a nominal efficiency for sulfate using standard operating conditions of at least 20,000 plates/meter. The highly cross-linked (55%) substrate core permits the use of organic solvents in the eluent without loss of bed stability. This column usually operates at a back pressure of 2,000psi at 1.0 mL/min. However, the column is capable of operating at back pressures up to 4,000 PSI.

6.1.9 Anion Self Regenerating Suppressor:
Suppression of the eluent or background conductivity allows the detector to see lower concentrations of ions. The Dionex ASRS-II Anion Self Regenerating Suppressor utilizes a semi-permeable membrane in combination with an electrical current to suppress eluent conductance.

6.1.10 ACI Computer Interface:
The Advanced Computer Interface (ACI) module functions as the communications and control link between the host computer and the other modules. Commands from the host computer are sent as strings of ASCII characters which are translated to binary instructions for the modules.

6.1.11 Computer Software:
The Dionex 4500i system uses a windows based software package. The Chromel software affords the user flexibility during operation. Operator has control over all modules by setting up a Methods file. Schedule files are set up and run. Data is plotted in real time and results are integrated. Chromatograms are stored on disk and can be reprocessed if need be.

6.1.12 Computer:
System requires at least a Pentium microprocessor, 32 meg of ram, floppy disk drive, CD rom drive, 1gig hard drive, color monitor, serial port, parallel port, mouse, and printer.

7. REAGENTSANDCONSUMABLEMATERIALS

7.1 Eluent:
The recommended eluent for running Cl, Br, SO_4, NO_3-N, O-PO_4, on the AS18a column must be purchased from Dionex. The cartridge is supplied with a serial number required to operate the system. As the system runs the eluent is depleated until 0% is reported by the sytem and a new cartridge is required.

7.2 Regenerant:
The Dionex utilizes the Self-Regenerating Suppressor (SRS). AutoSuppression technology allows the SRS to continuously produce the ions required to neutralize the eluent by the electrolysis of water. The water supply is drawn from recycled eluent.

7.3 Sample Vials:
The Autosampler uses Dionex .5 mL or 5.0 mL plastic vials with 20μ filter caps. Each 5mL cassette holds 6 vials and the .5mL cassettes hold 8 vials.

8. CALIBRATIONANDSTANDARDIZATION

8.1 Anion Stock Solutions are 1000ppm Ricca single analyte calibrants.

8.2 Working Standards:
Tare 500 mL flask on balance and make the following standards on w/w basis.
Chloride: .050 mg/L, .200 mg/L, 1.000 mg/L, 2.000 mg/L
Bromide -: .010mg/L, .050mg/L, .100mg/L, .25mg/L
Nitrate - Nitrogen: .010 mg/L, .050 mg/L, .100 mg/L, 0.500mg/L
Phosphate: .010 mg/L, .050 mg/L, .100 mg/L, .250 mg/L
Sulfate: .250 mg/L, .500 mg/L, 2.000 mg/L, 4.000 mg/L

9. QUALITYCONTROL

9.1 Stock solutions are made up or purchased yearly. Two aliquots are set aside in order to check the stock concentration if necessary.

9.2 QC concentrates from NSI are sent to the lab quarterly. They are analyzed for SO4, Cl, NO3-N, PO4 and Br. A value within the 95% C.I. is considered acceptable. Samples are run in triplicate. X bar charts will be used for these results. See Standard Methods, 1989.

9.3 A standard curve is determined before every analysis with the Ion Chromatograph. R squared must equal 0.98 or greater before samples are analyzed.

9.4 Daily QC checks are done with solutions made from the NSI concentrates. Acceptable ranges for each ion are based on 95% confidence limits.

9.5 Check limits of detection annually for all instruments.

9.6 Check calibration of balances twice a year.

10. PROCEDUREANDCALCULATIONS

10.1 I.C. Startup:

1. Turn Helium gas on at tank and set pressure to 110 psi. (preset)
2. Unscrew cap on H2O reservoir bottle #1 and fill with water. Set pressure on bottle to 20psi.
3. Turn power on to the computer and start Peaknet program by clicking on the desktop icon.
4. Turn power on to the Dionex system by pushing the blue power button just below the degas module. All lights should come on and you will hear a pop and hiss as the gas valves open.
5. Turn eluent degas module on by flipping up toggle switch on left side and set pressure to 5psi. (preset)
6. Flip reservoir switch 3 up to the on position.
7. Flip mode switch up to the sparge position. (should already be in that position.) Allow eluent to degas for about 5min. before flipping switch down to pressurize.
8. Turn ACI unit off and then on to inialize communications with the computer.
9. Pump and conductivity detector should be in remote mode to receive instructions from the computer.
10. After eluent has been degassed and pressurized you may start the Anions3.method from the RUN menu. Click on RUN icon. Two windows will open, one for anions and one for cations. Close the cations window.
11. Click on File Open and select Anions3.met. The method will now download to the system. The pump and detector must be in remote mode. The sampler is always in local mode. Check the flow readout – should be 100% of eluent #1 at 1.0mL/min. If not – download method again.
12. Power to the self regenerating membrane suppressor (SRS) is controlled by the ACI unit and will come on (green light) when the method in downloaded.
13. Pressure should rise to about 2000 psi. If not then pump may have lost it's prime. Refer to trouble shooting guide. When stable, pump pressure should level out to 2000 psi.
14. After about 5 minutes conductivity should stabilize at 1.5 μs.

10.2 Sampler startup:

1. Load first sample cassette as follows: #1 test standard, #2 lowest standard, #3 next highest, #4 next highest, #5 highest standard, #6 QC Anions check standard.
2. Sample vials come in two sizes, .5mL and 5mL. Normally we use the 5mL size. Fill each vial to within ½ inch of the top. Caps and vials should be handled with gloves, taking precautions against possible contamination. Using the black insertion tool, caps should be pushed down into the vial such that the top of the cap is flush with the top.
3. Open top of sampler and find cassette holder on left side. Push cassette holder back and insert cassette with white dot at top right.
4. Press run on sampler and first vial will move into position.
5. On computer, click on Schedule and open the ancal1.sch file. Edit the data file column and put in today's date (3a100902). Copy down column and save file.
6. On the Run menu select load, schedule.
7. Select ancal3.sch
8. Open ancal3.sch and method will now download to the I.C.
9. Check the flow readout – should be 100% of eluent #1 at 1.0mL/min. If not – download method again.
10. Point to Run and click.
11. Point to Start and click.
12. Point to Ok and click.

10.3 Calibration:

1. Each chromatogram will take about 15 minutes. After the standards have run, look for any abnormalities such as: peak areas not close to what you would expect, peaks not identified correctly, or noisy baseline. If not refer to trouble shooting guide.
2. After test sample, all four standards and QC sample have run (about 90 min.) the system will automatically update anions3.met. You may view the plot of standards using the Optimize program.
3. Open a file and click on component table. To see the calibration curve, click on Details. You should see a straight line intersecting each of the four points. The regression equation should yield r2 values of .98 or better. If not, then the standards are not made correctly or peaks were not integrated correctly. Make sure you use the standards specified in section 8.2. The anions1.met expects to see these concentrations. Refer to trouble shooting guide section 10.8.
4. Click on the Ok button or go to the next component.
5. If everything looks good then click on OK and close.
6. Check QC chromatograms and confirm that all ions are within acceptable limits.

10.4 Schedule:

1. While calibration is running you should click on the down arrow in the top right of screen. This will minimize Run as an icon in the bottom left corner on screen. The main menu will appear which will allow you to select the Schedule program.
2. Click on file, open and choose a schedule to edit.
3. If you include Anstop1.met as your last sample the system will stop the pump and turn off the SRS. Click on file print to produce a hard copy of the schedule. This is useful when loading the samples into the cassettes to check for correct order.
4. Close schedule by clicking on bar at top left. Return to run program by double clicking on run icon at bottom.

10.5 Sample run:

1. After loading samples in cassettes and putting them in the sampler press run on front panel of sampler and first vial will come into position.
2. Load Schedule from Run program and click on Ok. i.e. WSRG.sch
3. Click on Start and then Ok.
4. Program will download to I.C. and begin to sample vial #1 of the cassette.
5. In the back of this manual you will find some examples of chromatograms. If something looks wrong with the chromatogram you can end the run by clicking on Run, End and Ok. You can put sampler on hold and use skip to move the cassette out in order to reposition cassette to first vial.
6. When that schedule is finished you can start another.
7. You may also work on a schedule while another is running.

10.6 Shutdown:

1. After last sample has finished pump will automatically stop if anstop1.met was loaded as the last sample in the schedule. System can be left in this mode until the next day.
2. On degas module flip mode switch to sparge and wait about 10-15 seconds.
3. On degas module flip system switch to off and flip reservoir 1 to off.
4. Turn gas off at helium tank.
5. Turn off power to I.C. unit.
6. Shut down computer.

10.7 Data Processing:

2. The Batch program is used to process groups of data files. After the Schedule has finished, use the Optimize program to look at several data files and make sure all

peaks were identified properly. Refer to section 10.8. If changes are made to the retention times of any components then the Method needs to be saved before running the Batch program.

3. Reports are generated by the Batch program. In Batch program click on Processing and in the Schedule box click Select. Double click on the current schedule and then click on the Export tab. Modify the text file name by putting in the date on the run ie 100902.csv. Click on Ok and then start Batch run by clicking the Run icon.
4. Text files can be viewed using Excel spreadsheet program. Open the text files in the An Reports folder and look for any abnormalities before coping and pasting into the Workbook.

10.8 Trouble shooting:

1. Pump- loss of pressure or erratic pressure: Sometimes the pump will lose it's prime because of outgasing of eluent. This can be prevented by making sure eluent is degassed before starting pump. In order to restore pump to normal operation you will need to force the gas out of the pump. Locate priming block on left side of pump. Insert 10ml syringe into luerloc and open valve on top of priming block. Slowly withdraw 8-10ml of eluent. Start the pump. Locate needle valve on pressure transducer and open counterclockwise while at the same time forcing eluent into the priming block with the syringe. The pump will make a sound like it is speeding up, this is normal. Close valve on pressure transducer and stop the pump. Close valve on priming block and turn pump back on. Pressure should return to normal.

2. If peaks are not identified correctly you may need to alter retention times in the component table. From the main menu double click on Method. Click on File and double click on anions1.met. Under data processing click on detector 1 and click on Components. Choose component Chloride, Nitrite, Nitrate, Phosphate, or Sulfate and move arrow to retention time block. Hold down left button on mouse and drag across existing time. Based on the most recent chromatogram type in new Retention time and click on enter. After you are done click on Exit and click on Ok. Click on File, Save, Ok and then Close.

3. If peaks areas are not integrated correctly you can modify integration parameters under Optimize. Click on Optimize in the Main Menu. Click on File and Open data file. Double click on data file of choice and chromatogram will appear. Click on file and open anions1.met. Click on Edit and click on Integration. Example: changing the start of peak detection on the Chloride peak. Move time cursor by pointing to area just before Chloride peak and clicking the right button on the mouse. Now go up to the peak detection block and click. The box should now have a X in it. Click on Reintegrate and view chromatogram and report. You may reprocess any data file using the Optimize program or the Batch program.

11. PRECISIONANDBIAS

11.1 Single operator precision and bias were obtained from the analysis of quality control check samples. QC samples were obtained from Environmental Resource Associates and were diluted according to manufacture's directions. Table 4 summarizes the data.

12. REFERENCES

12.1 Dionex Model 4500 i Operator Manuals, 1988, Dionex Corporation, 1228 Titan Way, Sunnyvale, California 94088-3603

12.2 Pfaff, J.D.; Brockhoff, C.A. and O'Dell, J.W., "The Determination of Inorganic Anions in Water by Ion Chromatography - EPA Method 300.0," , 1989.

12.3 Standard Methods for the Examination of Water and Wastewater, Method 429, "Determination of Anions by Ion Chromatography with Conductivity Measurement", 16th edition, 1985.

12.4 Small, Hamish, "IonChromatography", 1989 Plenum Press, New York.

Table 1. Method Detection Limits and Concentration Ranges for the Determination of Anions in Streamflow and Precipitation samples.

Analyte	Method Detection Limit mg/L	Concentration Range mg/L
Chloride	.007	0.05 - 1.00
Nitrite	.005	0.01 - 1.00
Nitrate	.005	0.01 - 1.00
Orthophosphate	.007	0.01 - 1.00
Sulfate	.038	0.25 - 4.00

Method Detection Limit: Sample Standard Deviation X Student's t value for one-tailed test at 99% confidence level with degrees of freedom = 7

Table 2. Retention Times for Chloride, Nitrite, Nitrate, Orthophosphate, and Sulfate

Analyte	Retention Time Range in minutes.
Chloride	4.49
Nitrite	5.41
Sulfate	5.97
Nitrate	9.25
Orthophosphate	10.53

Table 3. Suggested Calibration Standards for Streamflow, Precipitation, Thrufall, and Lysimeter Samples at Coweeta

Analyte	Calibration Standards mg/L
Chloride	0.05, 0.10, 0.50, 1.00
Nitrite	0.01, 0.05, 0.10, 0.50
Nitrate	0.01, 0.05, 0.50, 1.00
Orthophosphate	0.01, 0.05, 0.50, 1.00
Sulfate	0.25, 0.50, 2.00, 4.00

Table 4. Single Operator Precision and Bias for Chloride, Nitrite, Nitrate, Orthophosphate, and Sulfate as determined from Quality Control Samples.

Analyte	True Value mg/L	Number of Samples	Mean Measured mg/L	Mean Bias, mg/L	Standard Deviation, mg/L	Relative Standard Deviation, %
Chloride	.728	15	.731	.003	.015	2.05
Nitrite						
Nitrate	.046	15	.048	.002	.002	4.17
Phosphate	.140	15	.132	-.008	.008	6.06
Sulfate	.584	15	.575	-.009	.015	2.61

Relative Standard Deviation: 100 X (Sample Standard Deviation/Mean Value)

Figure 1. Chromatogram containing Chloride, Nitrite, Sulfate, Nitrate, Orthophosphate

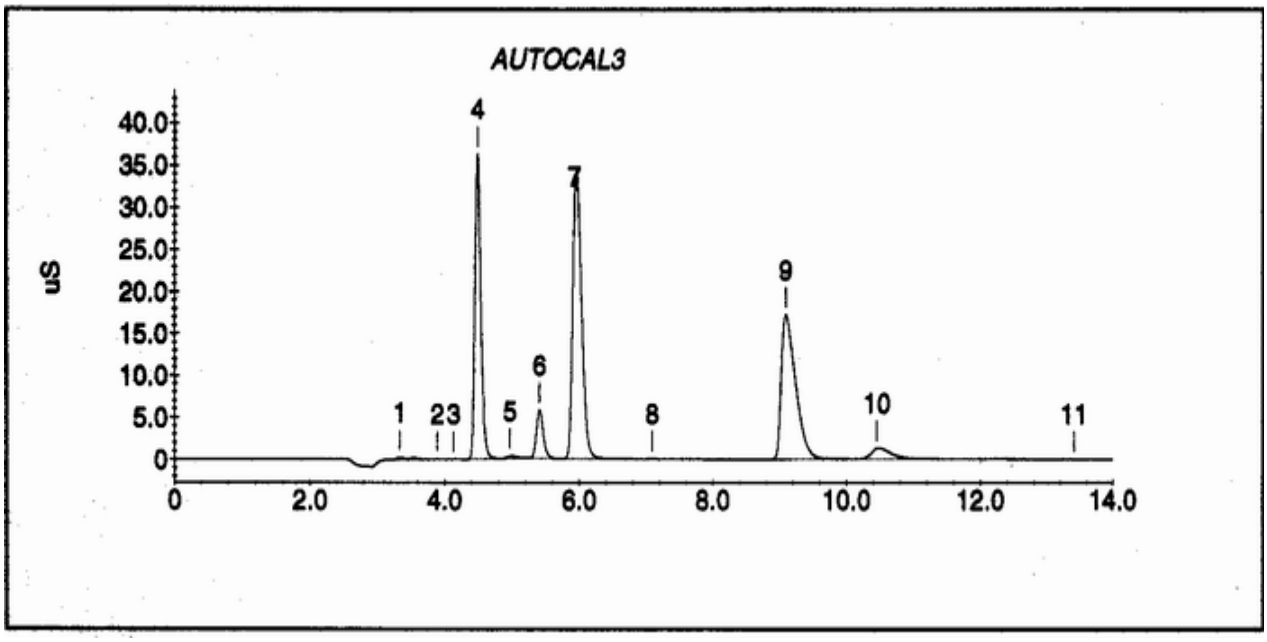

Peaks:
4. Chloride
6. Nitrite
7. Sulfate
9. Nitrate
10. Phosphate

Chromatographic Conditions: Guard
Column -- Dionex AG18A Separator
Column -- Dionex AS18A
ASRS-II Anion Self Regenerating Suppressor
Detector -- Dionex CDM-II
Eluent -- 20mM NaOH
Sample Loop -- 200 µl
Flow Rate – 1.0 mL/min
Detector Sensitivity -- 1.0 µS

Figure 2. Old Plumbing Diagram for Dionex 4500i system – AMMS suppressor with slider valve control.

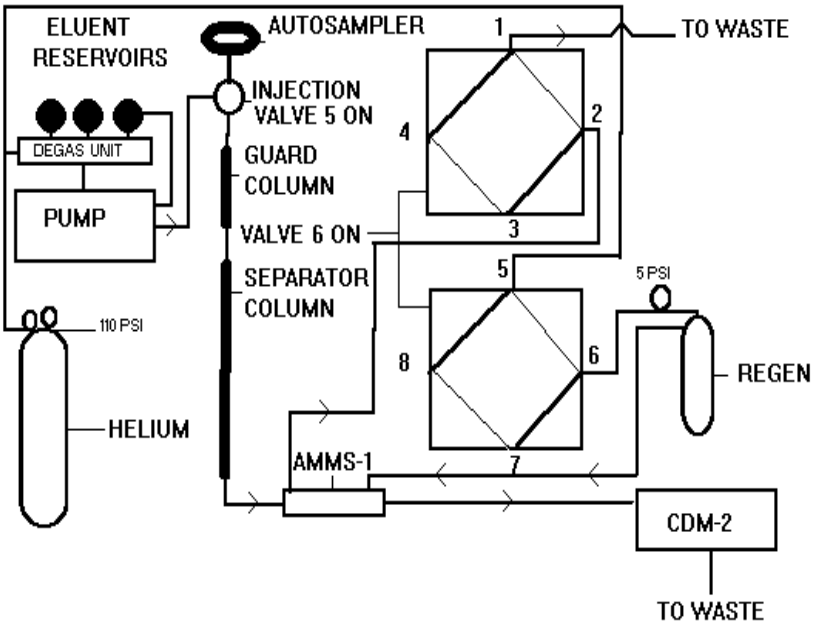

Atomic Absorption Spectroscopy
Determination of Potassium,
Sodium, Calcium, And
Magnesium by

February 2015

Coweeta Hydrologic Lab
3160 Coweeta Lab Road
Otto, N.C. 28763

Sponsoring Agency:

U.S. Forest Service
University of Georgia

Chelcy Miniat, Project Leader

Laboratory Manager:

Cindi Brown

Chemist:

Cindi Brown

Laboratory Technician:

Carol Harper
Sheila Gregory
Brandon Welch

Retired instrument 1/1/2014 – found it more efficient to analyze on ICP

INDEX

Number	Subject
01	Scope and Application
02	Summary of Method
03	Interference's
04	Range
05	Apparatus and Equipment
06	Safety
07	Requirements
08	Reagents
09	Standards
10	Procedure
11	Quality Control
12	Washing Procedure for Glassware and Centrifuge Tubes
13	References

TABLES

1.	Set Up Values for Flame
2.	Precision and Bias
3.	Method Detection Limits

FIGURES

1.	Sample ID Sheet
2.	Sample ID File
3.	Program Element File
4.	Instrument Page
5.	AutoSampler Page

ATOMIC ABSORPTION SPECTROSCOPY

1. SCOPE AND APPLICATION

1.1 This method is applicable for the determination of K, Na, Mg, and Ca in sample matrices of water, 2% nitric acid, 0.5M HCl, and soil extract (See cation soil procedure).

2. SUMMARY OF METHOD

2.1 Atomic absorption utilizes the principle that each atom absorbs light at a specific wavelength. Therefore, at a specific wavelength the quantity of the absorbing element can be measured and is proportional to its concentration.

2.2 A sample is aspirated into an air-acetylene (C_2H_2) or nitrous oxide (N_2O)-C_2H_2 flame. The molecules are atomized in the flame having a specific wavelength of light diverted through it. The atoms absorb light. The amount of light absorbed quantifies the amount of element present by use of Beer's Law A=abc.
Where, A=absorbance
a=absorption coefficient for the absorbing species
b=length of light path
c=concentration

2.3 A three point calibration curve is developed for each element plotting absorbance versus concentration.

3. INTERFERENCES

3.1 A chemical interference can arise when calcium is being measured and phosphate is present. The calcium and phosphate will combine to form calcium phosphate ($Ca_3(PO_4)_2$). Calcium phosphate does not completely atomize in an air-acetylene flame. Therefore, an excess of lanthanum chloride ($LaCl_3$) is added. $LaCl_3$ will react with the $Ca_3(PO_4)_2$ to form calcium chloride ($CaCl_2$) and lanthanum phosphate ($LaPO_4$). Calcium chloride is easily atomized in the air-acetylene flame.

3.2 Ionization interference can arise when using the hot N_2O-C_2H_2 flame. Because Ca is easily ionized, the hotter N_2O-C_2H_2 flame supplies the excess energy to ionize Ca. Therefore, there are fewer ground state atoms available for absorption. To control the ionization, an excess of an element easily ionized is added. Potassium chloride (KCl) is easily ionized and therefore used as an ionization suppressant.

4. RANGE

4.1 K 0.05 - 12.0ppm, using 1.0 and 3.0ppm standards or 1.0 and 6.0ppm standards.
Na 0.1 - 6.0ppm, using 1.0, 2.0,and 3.0ppm standards.
Ca 0.1 - 14.0ppm, using 1.0 and 3.0ppm standards or 1.0 and 6.0ppm standards.
Mg 0.02 - 5.0ppm, using 0.5, and 1.0ppm standards or 1.0 and 2.0ppm standards.

4.2 Note: The working range can be doubled by increasing the standard concentrations and changing the burner head from 10cm to 5cm. This is possible due to the relationship A=abc (see section 2.2 for definition). Since the burner head has been decreased in half, it will now take two times the concentration for the same absorbance.

5. APPARATUS AND EQUIPMENT

5.1 Perkin Elmer model AAnalyst 300 Atomic Absorption Spectrophotometer

5.2 Perkin Elmer model 90plus Autosampler

5.3 Perkin Elmer Auto-Prep 50 dilutor

5.4 Dell GX1 Computer – Pentium II 450 – CD rom

5.5 Hewlett Packard desk jet 695C printer

5.6 Interfacing software - Perkin Elmer AA WinLab version 3.2

5.7 Corning 15ml polypropylene centrifuge tube

6. SAFETY

6.1 All gas cylinder connections must be leak free.

6.2 Before igniting the flame ensure that:
a. The vent is on and drawing properly.
b. The burner door is closed.
c. The siphon interlock is filled with water.

6.3 When the flame is burning:
a. Never change the pressure at the gas regulator.
b. Never close a valve at either a regulator or a gas cylinder.
c. Never leave the flame unattended for long periods of time.
d. Never open the cover on the siphon interlock.

6.4 Make certain air bubbles do not remain trapped in the siphon U-loop underneath the interlock.

6.5 Do not adjust the nebulizer when using the N2O-acetylene flame.

6.6 Drain System
a. Do not kink or fold the drain tube.
b. Do not modify the float in the siphon interlock.
c. Do not store the waste vessel in a confined area.
d. Never use a glass container as the waste vessel.
e. Never close the neck of the waste vessel.
f. Never place the drain tube directly into a laboratory sink.

6.7 See Safety Practices for flame analysis located in the Perkin Elmer AAnalyst 300 Hardware guide.

7. REQUIREMENTS

7.1 Gases

Acetylene - AA Grade, 99.6% pure
Compressed Air - Breathing quality
Nitrous Oxide - CP Grade

7.2 Regulator Setting

Acetylene - 15 psig
Compressed Air - 58 psig
Nitrous Oxide - 58 psig

8. REAGENTS

8.1 1% $LaCl_3$

Weigh 5.9g La_2O_3 into a 500ml erlenmeyer flask. Rinse with a small amount (20ml) of deionized water. CAUTION - THIS NEXT STEP WILL PRODUCE A VIGOROUS REACTION!!! Slowly add 35ml concentrated HCl (trace metal grade). Swirl until dissolved. Using deionized water, transfer to a 500ml volumetric flask and bring to volume.

8.2 10% $LaCl_3$

Weigh 117.28g La_2O_3 into a 1000ml erlenmeyer flask. Rinse with a small amount (50ml) of deionized water. CAUTION - THIS NEXT STEP WILL PRODUCE A VIGOROUS REACTION!!! Slowly add 260ml concentrated HCl (trace metal grade). Swirl until dissolved. Using deionized water, transfer to a 500ml volumetric flask (containing 100ml of water) and bring to volume.

8.3 2% Nitric Acid

Pipette out 2ml of concentrated nitric acid (trace metal grade) into an acid washed (see section 12.1 for procedure) 100ml volumetric flask containing 50ml of deionized water. Bring to volume with deionized water.

8.4 1N NH_4Acetate

Add 600ml DI to a one liter volumetric. Add 58ml acetic acid and 70ml NH_4OH. Fill to the mark with DI. Adjust as necessary to obtain a pH of 7.

9. STANDARDS

9.1 Reference Standard

Perkin Elmer AS STD, ALTERNATE WATER POLLUTION, 4 METALS, PE # N930-0215, containing 100ug/ml Mg, K and 500ug/ml Ca, Na in 2% nitric acid.

a. Pour out a 0.5ml aliquot of the reference standard into a 5ml disposable beaker. Allow to come to room temperature.

b.1. In an acid washed (see section 12.1 for procedure) 100ml volumetric flask, pipette out 0.1ml. Bring to volume with deionized water. Cover and then invert 20 times to mix. The concentrations of the analytes are as follows: K,Mg - 0.1ppm, Ca,Na - 0.5ppm

b.2. In an acid washed (see section 12.1 for procedure) 100ml volumetric flask, pipette out 0.5ml. Bring to volume with deionized water. Cover and then invert 20 times to mix. The concentrations of the analytes are as follows: K,Mg - 0.5ppm, Ca,Na - 2.5ppm

9.2 Stock Standard Solution

Perkin Elmer AS STD, INSTRUMENT CALIBRATION-1, PE # N930-0218, containing 5,000ug/ml Ca, Mg, K, Na.

a. Pour out a 15ml aliquot of the standard solution into a disposable weigh boat. Cover and allow to come to room temperature.
b. Pipette 10ml of the standard into an acid washed (see section 12.1 for procedure) 100ml volumetric flask. Bring to volume with 2% nitric acid (see section 8.3). Cover and then invert 20 times.

9.3 Calibration Standards

a. Pour out a 2ml aliquot of the stock standard solution into a 5ml disposable beaker. Allow to come to room temperature.
b. Using an acid washed (see section 12.1 for procedure) 100ml volumetric flask, pipette out the following:
   For 0.5ppm - 0.1ml; used for Mg
   For 1.0ppm - 0.2ml; used for K, Na, Ca, Mg
   For 2.0ppm – 0.4ml: used for K, Na, Ca, Mg
   For 3.0ppm - 0.6ml; used for K, Na, Ca
   For 6.0ppm – 1.2ml;used for K & Ca
c. Bring to volume with deionized water and invert 20 times to mix.

10. PROCEDURE

10.1 Pour 10ml±0.5ml of sample into a centrifuge tube. Place in sample tray. Repeat for all samples listed on the Sample ID Sheet.

10.2 Make up the reference standard and calibration standards (see section 9).

10.3 Spectrometer Start Up

a. Turn on computer.
b. Turn on the spectrophotometer.
c. Double click on the AA WinLab Analyst icon.
d. The instrument will now go through several system checks.
e. After the checks are completed, click on the workspace icon.
Select the appropriate workspace.
In the Automated Analysis window under Set Up:
   1. Click on Sample Info File. Make sure the appropriate file is open.
   2. Click on Results Data Set and enter the day's date using the established format.
f. Flame Ignite
   1. Turn on hood.
   2. Open compressed air valve.
   3. Open acetylene tank.
   4. Click open the flame control and switch flame on.
g. Maximize Absorbance
   1. Put sample probe into deionized water.
   2. Under the Tools Menu go to continuous graph and ensure maximum absorbance is obtained (consult table 1). If not, adjust the nebulizer and burner.
h. Begin Analysis by clicking on analyze all in the automated analysis window.

10.4 For a N_2O-C_2H_2 Flame using a 5cm burner head:

a. Optimize the burner using an air-C_2H_2 flame.
b. Follow analysis procedures in 10.3.

10.5 Shut down

a. Go to the flame icon on the menu bar.
b. Turn flame off.
c. Close off acetylene.
d. Depress check gases.
e. Close off air and N_2O (if applicable) and press check gases.
f. Continue depressing check gases until all are clear.
g. Exit program.
h. Turn off spectrophotometer.
i. Turn off computer.
j. Turn off hood.

10.6 Special Considerations

a. Place red lens in the path of the light for K analysis.
For Ca analysis of water samples add 0.05% La to the samples and standards.
For the La addition to samples other than water, consult soil cation procedure.

11. QUALITY CONTROL

11.1 A three point calibration curve is generated at the start of the run.

11.2 The calibration curve is checked using a reference standard.
An accuracy of ±5% and a precision of 2% or less is maintained.

11.3 During the run the instrument recalibrates as dictated in the method.

11.4 Quarterly checks on the instrument and standards are made using National Standards Institute. At this time the reference standard is also checked using calibration standards.

12. WASHING PROCEDURE FOR GLASSWARE AND CENTRIFUGE TUBES

12.1 a. Wash in Joy dishwashing liquid.
b. Rinse with tap water.
c. Rinse with 5% HNO_3.
d. Rinse five times in deionized water.

13. REFERENCES

13.1 Analytical 100/300 Atomic Absorption Spectrophotometer Hardware Guide, Perkin-Elmer, Revision 0993-6088 Rev. E, June 1998.

Table 1. Setup Values for AAnalyst 300

Lamp#	Element	Wave length	Energy	Current	Slit	Max. Abs. with std()ppm
1	K	766.4	74	8	.7H	.12(1)
3	Na	588.9	74	6	.2H	.20(1)
2	Ca	422.7	74	10	.7H	.05(1)
2	Mg	285.2	74	10	.7H	.25(.5)

Table 2 - PRECISION AND BIAS

Element(Actual Conc) mg/L	K(0.049)	Na(0.050)	Ca(0.050)	Mg(0.010)
	0.051	0.057	0.049	0.012
	0.051	0.057	0.053	0.011
	0.052	0.057	0.051	0.013
	0.054	0.055	0.053	0.012
	0.053	0.056	0.049	0.012
Average	0.052	0.056	0.051	0.012
ΣBias	0.0002	0.0006	0.0001	0.0002
std. dev.	0.002	0.002	0.003	0.001
MDL	0.003	0.003	0.008	0.002

Table 3 – Method Detection Limits in mg/L

Analyte	Lab Desig-nation	Method	Instrument	Instrument in Operation	Units of reported values	2013 matrix = DI	2012 matrix = DI	2011 matrix = DI	2010 matrix = DI	2007 matrix = DI	2007 matrix = 2%HNO3
Potassium	K	Flame - absorption	Perkin Elmer Analyst300 Atomic Absorption Spectrometer, Perkin Elmer, Waltham, MA	June 1999	mg/L	0.004	0.015	0.029	0.002	0.029	0.019
Sodium	Na	Flame - absorption	Perkin Elmer Analyst300 Atomic Absorption Spectrometer, Perkin Elmer, Waltham, MA	June 1999	mg/L	0.018	0.017	0.007	0.006	0.007	0.008
Calcium	Ca	Flame - absorption	Perkin Elmer Analyst300 Atomic Absorption Spectrometer, Perkin Elmer, Waltham, MA	June 1999	mg/L	0.018	0.022	0.059	0.005	0.059	0.117
Magnesium	Mg	Flame - absorption	Perkin Elmer Analyst300 Atomic Absorption Spectrometer, Perkin Elmer, Waltham, MA	June 1999	mg/L	0.002	0.003	0.006	0.003	0.006	0.008

Figure 1 - ID/Wt Sheet

CATION DATA SHEET

SAMPLE ID_____
DATE ANALYZED_____

9._____
10._____
11._____
12._____
13._____
14._____
15._____
16._____
17._____
18._____
19._____
20._____
21._____
22._____
23._____
24._____
25._____
≈._____
49._____
50._____
51._____
52._____
53._____
54._____
55._____
56._____
57._____
58._____
59._____
60._____
61._____
62._____
63._____
64._____
65._____
66._____
67._____
68._____
69._____
70._____
71._____
72._____
73._____
74._____
≈._____
98._____
99._____
100._____
101._____
102._____
103._____
104._____
105._____
106._____

Figure 4 Methods Page

Inst.

Date: 03/06/30

Identification Potassium low stds Element K NewMethod

Spectrometer

Wavelength 766.5

Slit width 0.70

Timing

Read Time (sec) 3.00

Read dealay time (sec) 3.0

Modified settings No ⦿ Yes ❍

Signal

Type……..Atomic Absorption

Measurement……Time Average

Flame

Type Air/C_2H_2

Oxid flow L/min 11.00

Fuel flow L/min 3.00

Calib.

Autoprep – Dilutor

Dilution
No ⦿

Calibration Equation

Equation….zero intercept:nonlinear

Max Decimal Places 3 Max Significant Figs 4

Units

Calibration mg/L

Sample mg/L

Replicates

Number ⦿

Standard Conc

Standard Concentrations

ID	Conc	A/S Loc.

Appendix III -Instrument History with Average Method Detection Limit *

Instrument/Analyte mdl in mg/L unless stated otherwise	NH4	SiO3	Cl	NO3	PO4	SO4	Br
Auto Analyzer:							
Astoria 2 , Astoria-Pacific, Astoria, Astoria, Oregon 2006-current	0.002	0.003	NA	0.004	0.007	NA	NA
AlpKem 500 series,OI Analytical, College Station TX 1994-2011	0.004	0.087	NA	0.002	0.015	NA	NA
Technicon II, Technicon Industrial Systems, Tarrytown,NY 1971-1994	0.000	NA	0.018	0.008	0.004	0.029	NA
Lachat QuickChem FIA+, 8000 series,Hach Co., Loveland CO 2007-2011	NA	NA	NA	NA	0.005	NA	NA
Ion Chromatograph:							
Dionex 4000 capillary , Sunnyvale,CA 2014-current	NA	NA	0.008	0.006	0.006	0.015	0.001
Dionex 2500 , Sunnyvale, CA 2004-2013	NA	NA	0.016	0.003	0.012	0.014	0.005
Dionex 4500i , Sunnyvale, CA 1990-2004	NA	NA	0.056	0.012	0.013	0.092	NA
Instrument/Analyte mdl in mg/L unless stated otherwise	**K**	**Na**	**Ca**	**Mg**	**TP**	**Al**	**DOC**
Atomic Absorption Spectrometer:							
Perkin Elmer Analyst300 , Waltham, MA 1999-2013	0.009	0.009	0.021	0.003	NA	NA	NA
Perkin Elmer 2100 , Waltham, MA 1989-1999	0.012	0.042	0.018	0.004	NA	NA	NA
Perkin Elmer model 372 Norwalk,CT 1976-1989	0.004	0.021	0.008	0.006	NA	NA	NA
Inductively Coupled Spectroscopy:							
Thermo Fisher iCAP 6300, Madison WI 2012-current	0.010	0.012	0.010	0.004	0.003	0.006	NA
Jobin Yvon Ultima II , Horiba,Edison, NJ 2007-2012	0.023	0.033	0.052	0.020	0.026	0.018	NA
Instrument/Analyte mdl in mg/L unless stated otherwise	**DOC**	**TN**	**% C soil/plant**	**% N soil/plant**			
DOC/TN Analyzer:							
Shimadzu DOC-VCPH TN analyzer, Columbis, MD 2005-current	0.031	0.013	NA	NA			
Elemental Analyzer:							
Flash EA 1112 NC analyzer, CE Elantech, Lakewood, NJ 2005-current	NA	NA	.142/.593	.018/.11			
Perkin Elmer 2400 , Waltham, MA 1994-2005	NA	NA	.013/.998	.012/.114			

Instrument/Analyte mdl in mg/L unless stated otherwise	pH	Conductivity	HCO3				
pH Meter:							
Thermoscientific Orion 3 star pH benchtop (for soil)2009-current	0.023	NA	NA				
Orion Research Digital pH/millivolt 611 meter, Thermo Fisher Scientific, Waltham, MA (for water) 1985-current	0.010	NA	NA				
Beckman 3500 pH meter, Fullerton, CA date unknown	NA	NA	NA				
Beckman Zeromatic SS-3 pH meter,Fullerton, CA 1976-?	NA	NA	NA				
Conductivity Meter:							
YSI model 3100 2012 -current	NA	NA	NA				
Orion Model 122 conductivity meter date unknown- 2012	NA	NA	NA				

* See instrument section for method detection limits by year and matrix

Appendix IV – Safety Guidelines for the Lab

Section 1 - Use of Acids

a. Read the MSDS for the acid you will be working with. Refer to Section 5 for incompatible chemicals.
b. Use the chemical transport bucket to move the bottle of acid from the chemical storage building into the lab. Transport one bottle at a time.
c. Always wear goggles, lab coat and gloves when working with acids.
d. Work under the hood.
e. Pour concentrated acid into water. NEVER pour water into concentrated acid.

Acids used at Coweeta

Chemical	Symbol	Properties	Special Precautions
Acetic	CH_3COOH	Liquid and vapors cause severe burns to skin. Reacts vigorously with oxidizing agents and other acids (particularly nitric). Odor similar to that of strong vinegar.	Incompatible with most other acids. Store alone!
Chromic	H_2CrO_4	Liquid and vapors cause severe burns to skin. Corrosive to nasal passages. Contains a suspected carcinogen.	Carcinogenic.
Hydrochloric	HCl	Highly corrosive to skin and mucous membranes. Repeated exposure causes erosion of teeth. Strong chlorine odor detectable at 1-5 PPM.	
Hydrofluoric	HF	Liquid and vapors cause burns that may not be immediately painful or visible. HF attacks glass. HF looks like water and can kill in small amounts. Found in Buffered Oxide Etch (BOE).	Use only plastic containers.
Nitric	HNO_3	Highly corrosive to skin, mucous membranes and teeth. Highly reactive with acetic acid. Reacts explosively with combustible organic or other oxidizable materials.	Use only glass containers.
Phosphoric	H_3PO_4	Liquid is highly irritating to skin. Vapors are highly toxic. Contact with most metals causes formation of flammable and explosive hydrogen gas.	
Sulfuric	H_2SO_4	Liquid and vapors are extremely corrosive to skin and mucous membranes. Generates heat upon contact with water. Reacts with acetic acid.	Keep away from water

Section 2 - Use of Bases

a. Read the MSDS for the base you will be working with. Refer to Section 5 for incompatible chemicals.
b. Use the chemical transport bucket to move the bottle of base from the chemical storage building into the lab. Transport one bottle at a time.
c. Always wear goggles, lab coat and gloves when working with bases.
d. Work under the hood.

Bases used at Coweeta

Chemical	Symbol	Properties	Special Precautions
Ammonium Hydroxide	NH_4OH	Irritating to skin and mucous membranes. Emits highly toxic vapors when heated.	
Sodium Hydroxide	NaOH	Highly exothermic reaction. Can be explosive if mixed with aluminum.	Place mixing vessel in ice bath while adding the base.
Potassium Hydroxide	KOH	Highly exothermic reaction. Can be explosive if mixed with aluminum.	Place mixing vessel in ice bath while adding the base.

Section 3 - Use of Oxidizers

a. Read the MSDS for the chemical you will be working with. Refer to Section 5 for incompatible chemicals.
b. Always wear goggles, lab coat and gloves when working with chemicals.
c. Work under the hood.

Chemical	Symbol	Properties	Special Precautions
Hydrogen Peroxide	H_2O_2	Strong oxidizing agent. Irritating to skin and mucous membranes. Reacts violently with acids and organic solvents.	Cap with vented cap. Do not boil in open vessels, may cause explosion.
Magnesium Perchlorate	$Mg(ClO_4)_2$	Strong oxidizer. Contact with other materials may cause fire.	

Oxidizing materials are liquids or solids that readily give off oxygen or other oxidizing substances (such as bromine, chlorine, or fluorine). They also include materials that react chemically to oxidize combustible (burnable) materials; this means that oxygen combines chemically with the other material in a way that increases the chance of a fire or explosion. This reaction may be spontaneous at either room temperature or may occur under slight heating. Oxidizing liquids and solids can be severe fire and explosion hazards.

Common oxidizing liquids and solids include:

- bromine
- bromates
- chlorinated isocyanurates
- chlorates
- chromates
- dichromates
- hydroperoxides
- hypochlorites
- inorganic peroxides
- ketone peroxides
- nitrates
- nitric acid
- nitrites
- perborates
- perchlorates
- perchloric acid
- periodates
- permanganates
- peroxides
- peroxyacids
- persulphates

Section 4 - Use of Reactives

a. Read the MSDS for the chemical you will be working with. Refer to Section 5 for incompatible chemicals.
b. Always wear goggles, lab coat and gloves when working with chemicals.
c. Work under the hood.

Chemical	Symbol	Properties	Special Precautions
Phenyl Mecuric Acetate	PMA	May react with strong oxidizing agents. Extremely toxic.	Mercury fumes can be given off in case of fire.
1,4 Dioxane	$C_4H_8O_2$	Flammable, Contact with other materials may cause fire.	Flammable, Carcinogen

Section 5 - Incompatible Chemicals

Chemical	Is Incompatible with
Acetic acid	Chromic acid, nitric acid alcohols, ethylene glycol, perchloric acid, peroxides, permanganates
Acetone	Concentrated nitric and sulfuric acid mixtures
Acetylene	Chlorine, bromine, fluorine, copper, silver, mercury
Acids	Bases
Activated Carbon	Calcium hypochlorite, oxidizing agents
Alkali Metals	Water, carbon tetrachloride and other halogenated alkanes, carbon dioxide, halogens
Aluminum Alkyls	Water
Ammonia,	Mercury (e.g., in pressure gauges), laboratory gas chlorine, calcium hypochlorite, iodine, bromine, hydrogen fluoride
Ammonium	Acids, powered metals, flammable liquids, chlorates, nitrates, sulfur, fine-particulate organic Nitrate or combustible materials.
Aniline	Nitric acid, hydrogen peroxide
Azides	Acids
Bases	Acids
Bromine	See chlorine
Carbon Tetrachloride	Sodium
Chlorates	Ammonium salts, acids, powered metals, sulfur, fine-particulate organic or combustible substances
Chlorine	Ammonia, acetylene, butadiene, butane, methane, propane, hydrogen, petroleum benzine, benzene, powered metals
Chromic Acid	Acetic acid, naphthalene, camphor, glycerol, petroleum benzine, alcohols, flammable liquids
Copper	Acetylene, hydrogen peroxide
Cumene Hydroperoxide	Acids, both organic and inorganic
Cyanides	Acids
Flammable Liquids	Ammonium nitrate, chromic acid, hydrogen peroxide, nitric acid, sodium peroxide, halogens
Fluorine	Store separately
Hydrocarbons (butane, propane, benzene, etc.)	Fluorine, chlorine, bromine, chromic acid, sodium peroxide

Hydrogen Fluoride	Ammonia, laboratory gas or solution
Hydrogen Peroxide	Copper, Chromium, iron, metals and metals salts, alcohols, acetone, organic substances, aniline, nitromethane, combustibles (solid or liquid)
Hydrogen Sulfide	Fuming nitric acid, oxidizing gases
Iodine	Acetylene, ammonia (laboratory gas or solution)
Mercury	Acetylene, ammonia
Nitric Acid, Conc.	Acetic acid, aniline, chromic acid, prussic acid, hydrogen sulfide, flammable liquids and gases
Oxalic Acid	Silver, mercury
Perchloric Acid	Acetic anhydride, bismuth and its alloys, alcohols, paper, wood
Phosphorus	Sulfur, oxygen-containing compounds with such as chlorates
Potassium	See alkali metals
Potassium Chlorate	See chlorates
Potassium Perchlorate	See chlorates
Potassium Permanganate	Glycerol, ethylene glycol, benzaldehyde, sulfuric acid
Silver	Acetylene, oxalic acid, tartaric acid, ammonium compounds.
Sodium	See alkali metals
Sodium Peroxide	Methanol, ethanol, glacial acetic acid, anhydride, benzaldehyde, carbon disulfide, glycerol, ethylene glycol, ethyl acetate, methyl acetate, furfurol
Sulfides	Acids
Sulfuric Acid	Potassium chlorate, potassium perchlorate, potassium permanganate

Please note: This is not an exhaustive list of incompatible chemicals. See the specific lab standard operating procedures or your Lab Manager to determine additional material incompatibilities of which to be aware.

Section 6 – Use of the Muffle Furnace

Weighing out samples.	**Dust inhalation**	**Add sample slowly to crucible to reduce dust. Weigh out sample in enclosed scale to minimize dust. Wear a dust mask when working with particularly fine, dusty samples.**
	Broken crucibles or glassware	**Handle the crucible with care. Avoid bumping them into each other or other objects. If a crucible or glassware is cracked or chipped, dispose of it in the broken glass container. Do not use cracked or chipped crucibles or glassware.**
Loading / unloading samples.	**Tripping**	**Make sure there is a clear pathway to and from the furnace when carrying a tray of crucibles or glassware. Use a small tray to maximize your visual path.**
	Contact with ceramic fibers causing skin irritation	**Wear long sleeved garment when placing or removing items in muffle furnace. Avoid skin contact with furnace interior.**
Running the furnace	**Smoke**	**Organic samples will almost always create some smoke so be sure the exhaust fan is turned on when you program the furnace. Minimize smoke by NOT overfilling the furnace. Crucibles should not be more than 2/3 full. Do not overload the furnace.**
	Flames	**Flames are not part of the plan! The muffle furnace itself should not burn and samples are small enough to be consumed quickly. The furnace should be turned off if there are flames coming from it. If safe, manually turn the furnace off. If unsafe to approach the muffle furnace, sound the fire alarm to evacuate the building and to summon the fire department.**
Removing crucibles from muffle furnace	**Burns**	**Allow the furnace to cool BEFORE opening the furnace door. Do not remove hot crucibles from furnace. Use tongs to pull tray of crucibles in the back forward. They may still be warm or hot. Use caution when reaching into oven. Use tongs or oven mitts to remove the crucibles. Be conscious of the sides and top of oven. Be aware of surroundings when carrying hot objects.**

Section 7 – Use of Centrifuge

a. **The work surface must be level and firm**. Do not use the centrifuge on an uneven or slanted work surface.
b. **Balance the tubes in the rotor**! If you want to run a tube with 10 mL of liquid, put another tube with 10 mL of water in the **opposing** hole on the rotor. If the liquid has a higher or lower density than water, you must balance the tubes by mass, not volume.
c. **Do not open the lid while the rotor is moving**. Even though many centrifuges have a "safety shutoff" if the lid is opened, the only thing this does is stop *powering* the rotor. The rotor will still spin due to its own inertia for a while until friction slows and eventually stops it.
d. **If you see it wobbling or shaking, turn it off or pull the plug**. A little vibration is normal, but excessive amounts can mean danger. FIRST, double check that you correctly balanced the tubes. If the answer is yes and the wobbling still happens, contact the manufacturer or dealer and get the unit serviced. Do NOT continue to run a centrifuge that wobbles visibly when the rotor is spinning.
e. **Do not bump, jar, or move the centrifuge while the rotor is spinning.**

Section 8– Use of Ovens

Loading / unloading ovens	**Burns**	**Check oven temperature before use. Although off, it may still be hot enough to cause burns. Avoid contact with metal racks, the top and sides of the oven. Tongs should be used to reach into the back of the oven. Oven mitts should be used when handling tins, sample bags, trays, etc. Stand back when opening the oven to avoid exposing face and eyes to heat. Do not move or remove the rack which covers the elements.**
Monitoring oven temperature	**Mercury poisoning (vapor phase)**	**Use only non-mercury (red alcohol or mineral spirit) thermometers to monitor oven temperature. When a mercury thermometer breaks, the mercury is easily vaporized at the temperatures we generally use and poses a serious poisoning hazard. Non-mercury thermometers will be filled with a red or blue liquid; mercury is silver.**
Drying soil samples	**Damage to oven**	**Soil samples are to be placed on metal trays or in tins for drying. The standard drying temperature for bulk density measurement and to determine moisture contents is 105ºC. Plastic bags should not be placed in any drying oven.**
Drying vegetation samples	**Fumes, Smoke, Fire**	**Vegetation samples are dried in paper bags or tins at 60- 65ºC. Some people are sensitive to the smells produced during the drying of some vegetation samples. If smoke is smelled or seen coming from the ovens, <u>DO NOT OPEN THE DOOR</u>! The oxygen introduced when you open the door may allow the smoldering material to burst into flame. Instead, turn off the oven. If thick smoke prevents access to the oven room, throw the switch at the circuit breaker box. Contact the lab manager. Keep a clear space around the ovens. Do not store flammable materials/samples on, under, or around the ovens.**
Overnight drying	**Smoke, Fire**	**Allow the ovens adequate time to warm up and equilibrate. Check the temperature several times before leaving the building to ensure that the temperature is stable and appropriate for the samples/material being dried.**

Section 9 – Use of Ball Mill Grinder

Handling branches	**Sharp leaves, thorns, conifer needles, broken branches, rough bark**	**Prevent abrasions, cuts, stabs and pokes by wearing the proper PPE for the type of vegetation sample being processed. Gloves made of leather or other impenetrable material are recommended. Safety glasses are required to protect eyes during handling of fresh and dried vegetation.**
	Flying Debris	**Wear appropriate eye protection to protect your eyes. Use caution and appropriate tools to divide material into grindable portions.**
Grinding	**Noise**	**Wear appropriate ear protection.**
	Possible damage to mill	**The vial container must be clamped securely or it will come out of the holder while mixing is occuring causing destruction of the mixer. Mixer must be balanced.**
Removing the sample	**Moving Parts**	**The ball mill grinder is equipped with a safety feature that does not allow the grinder to open while in motion. If motion is detected do not force the top open.**
Use of air hose to clean out sample container	**High pressure**	**When using the air hose to clean out the container be aware of the force of air coming out of the hose. Keep the hose pointed away from the body. Wear eye protection.**

Appendix V – Miscellaneous

1. Instructions for filling Ion Exchange Resin Column……..269

Instructions for Filling Ion Exchange Resin Column

1. Take a clean empty ½" x 14" resin tube and tightly wrap each threaded end 4-5 times with Teflon thread tape.
2. Wearing lab gloves pull off a piece of polyester fiber. The piece should be compacted into an approximately 2 cm long plug to be stuffed into one end of the resin tube. Plug should be about ½ cm into the tube. This will be the bottom of the tube.
3. Take a black (or gray) drain cap and thread it onto the bottom end of the resin tube (hand tight).
4. Place the resin tube in a rack (drain cap down) with a tray underneath to catch drippings.
5. Insert a 300-400 ml capacity funnel into the top of tube.
6. Using a scoop or a 50 ml beaker take 40-45 ml of Ion Exchange Resin from the resin container (wearing gloves).
7. Place resin into a clean 400 ml beaker.
8. Put 200 ml of Nanopure (distilled and deionized) water into beaker and swirl or stir into a slurry.
9. Let the resin settle and pour off the most water possible without pouring off the resin.
10. Repeat steps 8 and 9 two more times for a total of three rinses.
11. Put 200 ml of Nanopure into the beaker again, swirl or stir into a slurry and immediately pour the resin and water into the funnel.
12. Allow water to drain and remove funnel. The resin should reach to two cm from the top of the tube.
13. If there is too much resin in a tube use a clean spatula or scoop to remove some resin. Place this excess resin back into the 400 ml beaker for re-use or put it directly into another resin tube.
14. If there is resin backed-up into the funnel, move the funnel to another tube or use squirt bottle to put the resin back into the 400 ml beaker for reuse.
15. Once resin is in the tube and drained put a slightly smaller fiber filter plug 1cm into the top of the tube.
16. Wipe any water or resin off the threads and screw on the white cap. The top cap should only be threaded tightly enough that it won't fall off.
17. The resin tube can now be removed from the rack and stored upright in a bucket. The bottom of the bucket should be lined with paper towels to soak excess water dripping from the tubes.